Public Service Company of New Mexico
414 Silver Ave. SW - ES18
Albuquerque, NM 87102-3289
Distribution.Standards@pnm.com
See Page 9 for Appropriate
Phone numbers

To: Electric Service Guide 2013 Users,

This is the 2013 edition of PNM's Electric Service Guide (ESG). Please discard previous versions of the ESG to ensure you have only the most current information, requirements, and specifications for your project. This book is intended for your use in planning and securing your electric service for whatever type of project with which you are involved. Use of this book can help you avoid unnecessary delays or expense.

Please call PNM's team of new service representatives at an early stage in your project to help ensure your needs can be met in a timely fashion. This book is not intended to be a substitute for direct communication with PNM concerning your service. Let us help you from the outset with the latest information and requirements.

The information and requirements in this Electric Service Guide contain updates from the previous 2012 ESG. Some of the changes are detailed below:

- Unlike previous years, Electric Service Guide's are no longer free. There is no charge to view the guide on line at PNM's web site www.pnm.com/esg.
- The cost including shipping is $30.00/ea for the guide and $10.00/ea for the CD. Those customers wishing a copy can do so by going to http://aikenprinting.com/cat/PNM-Order-Online.

Drawings

At the front of the Construction Drawing section of the ESG is a notice emphasizing that changes may occur at any time to any of the drawings, and a new service representative should be contacted for the latest version of any drawing contained in the ESG.

- We use a revision block at the top of our Standards drawings. The most recent drawing revisions will appear in the block and the revised date in the bottom right corner.

Reminder: At the front of the ESG, immediately following this letter is a feedback form for your comments on the ESG. We are looking for any suggestions, changes, or improvements you may have to make the ESG more effective in helping you, to successfully receive electric service to your project.

We value you as a customer and hope that each new edition of the ESG is easier and more helpful to use. We also look forward to your input to the ESG via the feedback form at the front of the book. Please let us know how we are doing.

Thank you for the opportunity to provide you service.

Electric Service Guide
Committee 2013

PNM Service Territories

- The Albuquerque Division includes the City of Albuquerque, Bernalillo County, the Ambrosia Lake, Church Rock and contiguous areas.

- The Clayton Division includes the Town of Clayton and contiguous areas.

- The Deming Division includes the City of Deming and contiguous areas.

- The East Mountain Division includes the communities of Carnuel, Cedar Crest, Seven Springs, Sandia Park, San Antonio, Sedillo, Cedro, Yrisarri, Escabosa, and the incorporated Villages of Tijeras and Chilili.

- The Las Vegas Division includes the City of Las Vegas and contiguous areas.

- The Sandoval County Division includes the Town of Bernalillo, the City of Rio Rancho, the communities of Placitas, Pena Blanca, Sile, the Village of Corrales, the Town of Cochiti Lake, the Pueblos of Sandia, Santa Ana, San Felipe and contiguous areas.

- The Santa Fe Division includes the City of Santa Fe County, the Pueblos of Santa Domingo and Cochiti and contiguous areas.

- The Valencia Division includes the Town of Belen, the Village of Los Lunas, the Village of Bosque Farms, the Pueblo of Isleta and contiguous areas.

PNM - TNMP Service Territories

- The Silver City Division includes the Town of Silver City, the City of Bayard, the Town of Hurley, the Village of Santa Clara, the City of Lordsburg and contiguous areas.

- The Alamogordo Division includes the City of Alamogordo, the Village of Tularosa and contiguous areas.

- The Town of Ruidoso, the Village of Ruidoso Downs and contiguous areas.

Your Comments are Important!
Please Comment, Tear-Out, and Mail

Please use this form to communicate any recommended changes or any comments regarding the information contained within this book or the organization of this book. We need to hear from you in order to improve the Electric Service Guide, and any comments are welcome. Please fill-out this form as completely as possible such that we can follow-up with you should more information is needed. Thank you for your time and comments.

Date: _____
Business Name: _____
Address: _____
_____
_____

Requestor's Name: _____
Telephone No.: _____

Comments: _____
_____
_____
_____
_____
_____
_____
_____
_____
_____

Please Mail to:

Public Service Company of New Mexico
414 Silver Ave. SW - ES18
Albuquerque, New Mexico 87102 - 3289

PNM use only

Date received: _____
Reviewed by: _____
Comments: _____
_____
_____
_____

Action: _____Approved _____Under Study _____Not Approved

Comments: _____
_____

Signed by: _____ Date: _____

Table of Contents

Introduction and General Information Page 1

Introduction and General Information 1

Foreword 1

Introduction 1

Electric Inspection Permits 4

Temporary Electric Service 5

Underground Utilities Locating Service “Call Before You Dig” 6

Power Disturbances 7

Phone Numbers and Addresses 9

Single Family Homes: Electric Service Requirements Page 11

Steps for You to Follow to Receive Electric Service for Your Home 13

1. Plan for Your Electric Service 13
2. Submit Your Specifications to Us 14
3. Develop the Line Extension Agreement 15
4. Make Payment for Electric Facilities 16
5. Construct Facilities to Receive Permanent Power 17

Single Businesses: Electric Service Requirements Page 21

Steps to Follow to Receive Electric Service for your Businesses 23

1. Plan for Your Electric Service 23
2. Submit Your Specifications to Us 25
3. Develop Line Extension Agreement 27
4. Make Payment for Electric Facilities 28
5. Construct Facilities to Receive Permanent Power 28

Multiple Leased Residential Units Electric Service Requirements Page 35

Steps to Follow to Receive Electric Service for Your Multiple Leased Residential Units 37

1. Plan for Your Electric Service 37
2. Submit Your Specifications to Us 38
3. Develop Line Extension Agreement 39
4. Make Payment for Electric Facilities 41
5. Construct Facilities to Receive Permanent Power 41

Residential Subdivisions: Electric Service Requirements Page 47

Steps to Follow to Provide Electric Service to Your Subdivision 49

1. Plan for Electric Service 49
2. Submit Your Specifications to Us 50
3. Develop Line Extension Agreement 51
4. Make Payment for Electric Facilities 53
5. Develop Your Subdivision 53

Commercial/ Industrial Subdivision: Electric Service Requirements Page 55

Steps to Follow to Provide Electric Service to Your Commercial and Industrial Subdivision 57

1. Plan for Electric Service 57
2. Submit Your Specifications to Us 58
3. Develop Line Extension Agreement 59
4. Make Payment for Electric Facilities 60
5. Develop Your Commercial/Industrial Subdivision 60

Policies Page 61

Line Clearances from Buildings, Signs, and Other Structures 62

Access to PNM Equipment 63

Customer Generation System 64

PNM Territories Only 65

Preface to Electric Line Extension Policy 66

Procedures for Customer-Built Electric Line Extensions 67

Rule 15: Electric Line Extension Policy (Effective 08-11-99) 68

Rule 15 Appendix 1: Customer Built System Requirements (08-11-99) 71

Metering Policy 74

Trenching Policy 76

PNM TNMP Territories Only 77

Electric Line Extension Policy 78

Metering Policy 84

Trenching Policy 86

Customer-Owned Generating System
Page 88

Customer-Owned Generating System: Interconnection and REC Purchase Programs 88

1. One - Line Diagram Example Grid -Tied System 89
2. One - Line Diagram Example Line - Side Tap 90
3. One - Line Diagram Example Battery Backup 91
4. Three - Line Diagram Example Grid-Tied System 92
5. Site Map (Figure 1) 93
6. One - Line, Site Map and Placard Requirements (Figure 2) 94
7. One - Line, Site Map and Placard Requirements (Figure 3) 95
8. One - Line, Site Map and Placard Requirements (Figure 4) 96
9. One - Line, Site Map and Placard Requirements (Figure 5) 97

Construction Drawings

Name of Drawing	Drawing Number
Tree and Brush Trimming	ES-1.0
Maximum Available Fault Currents	DM-4-11.0
Attachment of Service to Riser	DS-4-3.0
Attachment of Service to Building	DS-4-4.0
Minimum Point of Attachment Height for Service Drop Cables	DS-4-4.5
Underground Service Entrance System	DS-4-5.0
Permanent Service Entrance (Can be used for Temporary Service)	DS-4-5.5 Page 1
Permanent Service Entrance (Can be used for Temporary Service)	DS-4-5.5 Page 2
Remote Temporary Meter Pole	DS-4-5.7
120/240V Underground Service Pole	DS-4-6.0
Single-Phase Customer Owned Riser on Customer Owned Residential Service Pole	DS-4-7.0
Overhead Permanent/Temporary Single-Phase or Temporary Three-Phase Service Pole	DS-4-8.0
200A Temporary Three-Phase Pedestal Metering	DS-4-8.5
Underground Residential Customer-Owned Service	DS-4-9.0
Underground Residential Customer-Owned Service on PNM Owned Secondary Pole	DS-4-9.3
Underground Commercial Customer-Owned-Service	DS-4-9.5
120/240V Underground Single-Phase Commercial Pedestal-Metering	DS-4-10.0
Single-Phase Padmounted Transformer Commercial Application	DS-7-14.0
Three-Phase Padmounted Transformer Customer Installed	DS-7-15.0
Three-Phase Padmounted Primary Meter and Switchgear Customer Installed	DS-7-15.1
Three-Phase Padmounted Transformer from Padmounted Switchgear	DS-7-15.2
Three-Phase Padmounted Primary Meter and Padmounted Switchgear	DS-7-15.3

Single-Phase Padmounted Transformer from Padmounted Switchgear DS-7-15.4

25-167 kVA Single-Phase Box Pad DS-7-16.1

75-500 kVA Three-Phase Radial Fed Transformer Pad DS-7-16.5

750-1500 kVA Three-Phase Radial Fed Transformer Pad DS-7-16.6

75-500 kVA Three-Phase Loop Fed Transformer Pad DS-7-16.7

750-1500 kVA Three-Phase Loop Fed Transformer Pad DS-7-16.7.1

Guard Post DS-7-16.10

Minimum Working Space and Fire Safety Requirements for Transformers DS-7-16.12

Working Space and Fire Safety Requirement Supplement DS-7-17.0

75-150 kVA Radial Fed Transformer and Metering Enclosure Pad DS-7-17.5

75-750 kVA Loop Fed Transformer and Metering Enclosure Pad DS-7-17.6

300-500 kVA Radial Fed Transformer and Metering Enclosure Pad DS-7-17.8

750-1500 kVA Radial Fed Transformer and Metering Enclosure Pad DS-7-17.9

Working Space Required for Padmounted Switchgear DS-9-17.0

200 Amp Tangent Riser Three-Phase 1/0, Three 2” Conduits DS-10-6.45

Trench Details ..... DS-10-8.0 Page 2

Trench Details ..... DS-10-8.0 Page 3

Trench Details ..... DS-10-8.0 Page 4

Trench Details ..... DS-10-8.0 Page 5

Trench Details ..... DS-10-8.0 Page 6

Trench Details ..... DS-10-8.0 Page 7

Trench Details ..... DS-10-8.0 Page 8

Trench Details (Rocky Areas) ..... DS-10-8.0 Page 9

Trench Details (Rocky Areas) ..... DS-10-8.0 Page 10

Clearances from Buildings and Other Structures ..... DS-13-2.0 Page 1

Clearances from Buildings and Other Structures ..... DS-13-2.0 Page 2

Clearances from Buildings and Other Structures ..... DS-13-2.0 Page 3

Clearances from Lighting and Traffic Light Supports and Structures of a Second Line DS-13-2.3

Vertical Clearances Above Ground, Roadway, Rail, or Water Surfaces ..... DS-13-2.5 Page 1

Vertical Clearances Above Ground, Roadway, Rail, or Water Surfaces ..... DS-13-2.5 Page 2

Vertical Clearances Above Ground, Roadway, Rail, or Water Surfaces ..... DS-13-2.5 Page 3

Swimming Pool Clearances - Overhead DS-13-6.0

Swimming Pool Clearances - Underground DS-13-7.0

Service for Hazardous Areas DS-13-8.0

Clearances for Gasoline and LPG Filling Station DS-13-8.5

Ground Assembly ..... DS-18-20.0 Page 1

Ground Assembly ..... DS-18-20.0 Page 2

Universal Support Brackets DS-18-22.0

Meter Drawings

Name of Drawing — **Drawing Number**

Meter Socket Ring MS-2-1.0

120/240V 125/200A Permanent Single - Phase Meter Socket MS-2-2.0
120/240V 100 - 150A Single - Phase Meter Socket Replacement MS-2-2.1
120/240V 100 - 125A Temporary Single - Phase Meter Socket MS-2-2.3
240V 200A Single - Phase Meter Socket MS-2-2.5
120/240V 125/200A Single - Phase Multi – Meter Socket MS-2-3.0
120/240V 200A Single – Phase Meter Socket with Bypass Handle MS-2-5.0
200A Three - Phase Four - Wire Wye or Delta Meter Socket MS-2-6.0
200A Three - Phase Four - Wire Wye 277/480V Wye Meter Socket MS-2-6.3
Single - Phase Six - Terminal CT Meter Socket MS-2-6.5
Three - Phase Thirteen - Terminal CT Meter Socket MS-2-7.0
Recessed Meter Socket MS-2-8.0
Double Window Three - Phase Instrument Transformer and Meter Enclosure MS-3-2.0
Recording Meter Instrument Transformer Enclosure MS-3-3.0
Over 200A 120/240V Single - Phase Meter Options MS-3-7.0
Over 200A Three - Phase Overhead Meter Options MS-3-7.5
Over 200A Three - Phase Underground Meter Options MS-3-8.0
277/480V Instrument Transformer and Meter Enclosure for Meter Network MS-3-9.0
Single - Phase Bushing CT Meter Installation MS-3-9.5
Three - Phase Bushing CT Meter Installation MS-3-10.0
120/208-277/480V CT Meter Enclosure MS-3-11.0
Optional Equipment to Provide Meter Data for Customer Use MS-3-12.0
120/208-277/480V Transformer and Meter Enclosure Using Trough MS-3-14.0
120/208-277/480V Enclosure Pad MS-3-16.0
7200/12470V CT and PT Meter Enclosure MS-3-17.0
7200/12470V Primary Meter Enclosure MS-3-18.0
7200/12470V CT and PT Meter Enclosure Mounts MS-3-20.0
7200/12470V CT and PT Enclosure Pad MS-3-21.0
120/240V Single-Phase Four-Terminal Modular Meter and Equipment MS-4-1.0

120/208V Five-Terminal Modular Meter and Equipment MS-4-2.0

120/208 - 277/480V 200A Three-Phase Four-Wire Multiple Meter MS-4-3.0

120/208 - 277/480V Three-Phase Four-Wire Multiple Meter MS-4-4.0

Rain Tight Housing for Switchgear and Meter MS-4-5.0

Switchgear Meters with Padmount Transformer MS-4-7.0

Switchgear Seven-Jaw Socket Meter MS-4-8.0

Cradle Mount CT Switchgear Metering MS-4-9.0

120/208 or 277/480V Switchgear Metering MS-4-11.0

120/240V 125-200A Pedestal Meter MS-5-2.0

Permanent Single-Phase or Three-Phase Pedestal Meter MS-5-3.0

Single-Phase Overhead or Underground Mobile Home Park Group Meter MS-5-4.0

Over 400A Permanent Three-Phase Pedestal Meter MS-5-5.0

240V Single-Phase Commercial Pedestal Meter MS-5-6.0

Underground or Overhead Working Space for Electric Meter MS-7-1.0

Working Space Required for Meter Enclosure MS-7-2.0

REC Meter Base Standard 120/240V Meter Base – Neutral NOT Bonded MS-8-1.0

REC Meter Base Standard 240V Meter Base without Neutral MS-8-1.5

120/240 100 – 150A Single – Phase REC Meter Socket
For Renewable Systems Less Than 10 kW MS-8-2.0

277/480V, 120/208V Four-Wire Ground Wye 1 Inverter, 3 Outputs without Neutral MS-8-3.0

277/480V, 120/208V Four-Wire Ground Wye 1 Inverter, 3 Outputs with Neutral MS-8-3.3

277/480V, 120/208V Four-Wire Ground Wye 3 Inverters, 3 Outputs with Neutral MS-8-3.7

120/208V Four-Wire Ground Wye 1 Inverter, 2 Outputs without Neutral MS-8-4.0

120/208V Four-Wire Ground Wye 1 Inverter, 2 Outputs with Neutral MS-8-4.5

7200/12470V Primary REC Meter Enclosure MS-8-5.0

Over 200A Three-Phase REC Meter Options MS-8-6.0

Introduction and General Information

The Electric Service Guide in general is for PNM Service Territories (See page ii). Check with your new service representative to determine which steps are appropriate for your situation.

Foreword

Let us know if you have any suggested improvements for this book.

Welcome to the Electric Service Guide. Please read this section for an explanation of and an introduction to the purpose and use of the Electric Service Guide. This section also contains important information on permits, the New Mexico One Call System, and power disturbances. Should you have suggestions for improvements or solutions to problems with this guide, complete and forward one of the "Comments" form at the front of the book.

Introduction

This book will let you know the steps to follow to receive electric service.

We designed this book to provide you, our Customers, with the most complete, current, and accurate information available to help you plan for electric service in our service area. This guide is derived from the Rules and Regulations covering electric service approved by the New Mexico Public Regulation Commission. Should any statement or provision in this publication seem to conflict with the Rules and Regulations, the Rules and Regulations will prevail.

- The Electric Service Guide is a tool for you to use to plan and build your project.
- The Electric Service Guide can save you time and money.

Copy of the ESG can be viewed at www.pnm.com/esg

The ESG can be viewed at www.pnm.com/esg. Questions on information contained in this book should be directed to your local PNM office.
Electric Service Guide provides guidance to electrical contractors, architects, consulting engineers, developers, home-builders, and land planners. Those customers wishing a copy can do so by going to http://aikensprinting.com/cat/PNM-Order-Online..

The procedures in this book enable a complex and regulated process to work for the many people involved.

The following procedures and requirements are necessary because they provide a structure that allows a complex process to be completed in a predictable and efficient fashion. We realize that any successful development requires cooperation and scheduling among many entities, which could include contractors, utilities, municipalities, banks, and others. Therefore, we provide this document to

- promote mutual planning and scheduling
- promote fair and consistent treatment for you and your contractors
- ensure compliance with the requirements of the Public Regulatory Commission
- coordinate with the requirements of local government inspection and permitting agencies regarding enforcement of the National Electrical Code (NEC), and the National Electrical Safety Code (NESC)
- ensure compliance with all applicable environmental laws

Our process to provide you with electricity is governed by several policies, including the Line Extension Policy that are approved and monitored by the Public Regulatory Commission. These policies are established to ensure that all customers, including those desiring line extensions as well as existing rate payers, are treated fairly and consistently. The complete text of these policies can be obtained from your new service representative. Most of these policies are included in summary form in the section of this document on "Policies" see page 61. In this chapter, we provide the important policy information that affects the residential homeowner.

The Electric Service Guide provides guidance to our Customers for most situations but it cannot address all circumstances. The general guidance provided by this book cannot take precedence over your specific requirements, company policies, Public Regulatory Commission Rules and Orders, and the contracts that are developed to serve your needs. Please be sure to discuss your requirements with a new service representative.

A brief explanation of the contents of each chapter in the book may be found below.

How to Use the Electric Service Guide

This chapter provides an overview of the contents of this book.

This chapter of the book outlines the structure and use of this book. You will find chapters of the book that are customized to specific types of developments, ranging in size from single homes to commercial/industrial subdivisions. General contractors, electricians, architects, or others who may perform work for many different types of residential and business structures will find useful information that applies to all types of construction. Also, general information is provided in this section regarding

- electric permits
- the New Mexico One Call System (CALL BEFORE YOU DIG!)
- important phone numbers and addresses
- power disturbances

Each of these chapters has been customized for the requirements of specific types of customers.

There are five chapters devoted to our major customer classifications. These five chapters are:

Single Family Homes, Electric Service Requirements

This chapter focuses on the single family home.

Single Businesses, Electric Service Requirements

This chapter focuses on single commercial businesses. Master metered apartments, and customers desiring primary metered service should use this chapter.

Multiple Leased Residential Units, Electric Service Requirements

Only apartments and leased mobile home parks with individually metered units are explained in this chapter. Master metered apartments are considered to be a single business.

Residential Subdivisions, Electric Service Requirements

Developers building residential subdivisions should refer to this chapter. This chapter focuses on providing electricity to lots, and does not include service to individual homes.

Commercial/Industrial Subdivisions, Electric Service Requirements

This chapter is for developers who want to provide an electric backbone system in a Commercial/Industrial Subdivision. Service to the future businesses within the subdivision will be handled as Single Businesses, above.

Customers should look to the appropriate chapter to determine the steps they need to follow to obtain electric service. Each of the above chapters contains information regarding

- procedures
- technical requirements
- drawing references
- policy summaries (what you need to know)

Policies

Policy summaries may be found in the chapter entitled "Policies", page 61.

The chapter on policies contains general summaries of policies that apply to all customer classes. Policies summarized in this chapter include:

- Line Clearances from Buildings, Signs, and Other Structures
- Access into PNM Equipment
- Customer Generation Systems

PNM Service Territories:

- Electric Line Extension Policy
- Metering Policy
- Trenching Policy

PNM – TNMP Service Territories:

- Electric Line Extension Policy
- Metering Policy
- Trenching Policy

Drawings

Technical drawings are in the back of this book.

The last chapter contains drawings. The drawings are in numerical order. Our drawings are prefixed with “DS” or “DM” for Construction Drawings and “MS” for Meter Drawings followed by numbers, for example DS-4-5.0, DM-4-11.0 and MS-2-4.0. In this book, drawings referenced in the text may be found in that last chapter. Each chapter in Electric Service Requirements identifies drawings that show material or interconnection requirements. Please reference the appropriate drawing as needed.

Electric Inspection Permits

You must obtain an electrical inspection permit for your facility before we can supply you with electricity.

In order to provide for public safety, all electrical facilities must be inspected and permitted by the City, County, or State, or tribal authority having jurisdiction. We cannot energize facilities that have not passed inspection by the appropriate jurisdictional body.

Your electrician can acquire your permit.

The procedure for acquiring an electrical permit is generally the same throughout the state. The Customer can rely on a licensed electrical contractor to acquire and process the permit for service. Please contact a new service representative if you need clarification with permit and inspection procedures. Locations and phone numbers for electrical permit offices are listed on page 10.

Our process starts when we receive the permit from the appropriate jurisdictional authority.

If the electrical facilities do not pass an inspection by the jurisdictional authority and by PNM, they will be tagged and put on hold until the problems are corrected. Once the problems are corrected, your electrician must request re-inspection.

We will never energize facilities that we believe are hazardous.

Please allow the time indicated below from the date we receive the electrical inspection permit until your service is energized:

- 7 working days for temporary service
- 10 working days for overhead service
- 12 working days for underground service

If you plan to do your own electrical work, be sure to acquire the proper permit.

If you plan to do the electrical wiring for your home, you need to acquire a Homeowner’s Permit from your local inspection authority. You must present them with a complete drawing of the proposed work, and a Recorded Warranty Deed or Real Estate Contract.

Temporary Electric Service

You or your electrical contractor may need to construct a temporary service to receive construction power. For best results, have this work completed and make certain we have the permits before we begin construction. This will enable us to connect your service at the time we build your line extension.

The following table shows the drawings to reference for the facilities you need to build to receive construction power.

Temporary Service Drawing Summary

Type of Installation	Single-Phase		Three-Phase	
	Overhead	Underground	Overhead	Underground
Customer's service pole	DS-4-8.0	DS-4-6.0	DS-4-8.0	DS-4-8.5
Meter Socket 200 Amps or less	MS-2-2.0	MS-2-2.0	MS-2-6.0	MS-2-6.0

What you need to know about temporary electric service:

- Temporary electric service is power used during the construction.
- If power is not available on site, you must pay our cost to install and remove facilities needed for construction power.
- Additionally, customers must pay a connection charge. These fees will be charged on your first electric bill for temporary service. This cost is not refundable.

Before we can connect our electric lines to your temporary service, we must receive a permit from the local inspection authority approving the safety of your facilities. Please allow 7 working days for us to connect your service after we receive the permit and all the other conditions are met. Other conditions may include but are not limited to easement and right-of way, execution and completion of a line extension and permits.

What you need to know about temporary electric permits:

- In order to provide for public safety, all electrical facilities must be inspected and permitted by the City, County, or State having jurisdiction.
- We cannot energize facilities that have not passed inspection by the appropriate jurisdictional authority.
- We will connect your temporary service within 7 working days of the time we receive the permit.
- Your licensed electrical contractor can acquire and process your permit for electric service.

Don't forget to call before you dig.

You must call for identification of underground utilities before you do any digging. New Mexico has a "One Call" system that enables you to call one phone number, and have the location of all underground utilities marked. See page 6 for more information on One Call.

UNDERGROUND UTILITIES LOCATING SERVICE "CALL BEFORE YOU DIG"

Utilities work together to prevent damage to their underground facilities.

We have always supported programs that provide for the location of underground facilities. These programs are part of a concept that resulted from the passage of a state law. **Liability for damages to underground facilities is the excavator's responsibility unless the utility improperly locates the underground facilities.** We locate our underground facilities when requested by excavators.

Be sure to call before you dig. See page 9 of this book for the number to call in your area.

In all PNM divisions, this location service has been formalized into a program called New Mexico One Call. This program allows an excavator to call one telephone number for all locations, instead of calling each utility individually. Every utility member who participates receives excavation notices. There is a minimum waiting period of two working days to allow all utilities to appropriately identify their underground facilities. When the utilities have located their facilities, the excavator can determine the individual utility location by the color code assigned to that particular utility. Facilities will be identified with stakes or painted markings.

- BLUE - Water
- GREEN - Sewer
- RED - Electric
- WHITE - Excavator's digging site, marked by excavator prior to requesting locates.
- YELLOW - Gas
- ORANGE - Communications (initials designate company)
- PINK - Offset

It is the excavator's responsibility to contact any other utilities which may also have nearby underground facilities and who do not participate in New Mexico One Call Systems. Marking of underground utilities are valid only for a period of 10 days. If this period is exceeded, a new request must be made. Once underground facilities have been located, there should not be any mechanical excavation within 18 inches of the spots.

What you need to know about the New Mexico One Call System.

- **The "Call Before You Dig" number in your area is located on page 9.**
- 2 working days notice will be needed before you start excavation.
- Marking is guaranteed accurate for 10 days. Reaffirmation is required every 10 days after the initial location is requested.
- No mechanical digging can be performed within 18 inches of marking.

If the area is not marked "Clear" or "No Underground Facilities" the excavator shall contact the one-call notification system operating in the intended area or the owners or operators of any existing underground facility in and near the excavation area that are not members of the local one-call notification center in order to verify the area as "Clear" or "No Underground Facilities."

You are responsible for locating your own facilities, so that other utilities may dig in the vicinity.

Locating Underground Customer-Owned Facilities

The customer must locate and spot customer-owned facilities such as sewer and water lines on each lot before we install electric lines. Other customer-owned facilities may include the underground electric service line from a PNM pole to a building. New Mexico One Call will not spot customer-owned facilities. We cannot be responsible for damages to any facilities that are not spotted, or spots that are off by more than 12 inches.

Power Disturbances

We provide utility grade electricity.

PNM provides utility grade service in accordance with the American National Standards Institute (ANSI) standard C84.1 which defines acceptable voltage limits for utility service. ANSI standard C84.1 does not address voltage surge levels or surge duration for electric utility systems.

Our reliability is high, and we are striving to make it higher, but electric disturbances are inevitable.

PNM maintains a high level of electric reliability. However, short duration disturbances which occur on our power system can affect the operation of sensitive electronic controls and sensitive electronic equipment. PNM's transmission system typically experiences unavoidable disturbances throughout the year. Most do not cause power interruptions, but can cause voltage fluctuations. These disturbances usually last less than one second and are typical in utility electrical systems.

Disturbances also occur on PNM's distribution system which can cause voltage sags, surges, momentary outages, or single-phasing.

Protect your operation from disturbances if you have special electrical needs.

If you have sensitive electronic controls or sensitive computer equipment, it is your responsibility to take appropriate actions to prevent these brief power disturbances from affecting your operation or process. **If you have three-phase equipment it is your responsibility to protect against "single-phasing".**

Use the following check list to aid in improving power quality.

The following check lists provide recommendations on grounding and power quality. Please review these lists and incorporate appropriate recommendations into your facility.

GROUNDING

- Securely bond neutral to ground at main distribution panel.
- Maintain an earth ground at service entrance.
- Securely bond building steel to the building electrical ground.
- Install grounding electrode to reduce ground resistance. Securely connect grounding conductor to grounding electrode. (The earth grounding system can be quite complex depending on soil types and your needs. An acceptable earth ground resistance is 25 ohms or less).
- Follow all National Electrical Code (NEC) guidelines.

POWER QUALITY

- Dedicate separate circuits to computers or sensitive equipment.
- Install an equipment grounding wire with dedicated circuits. Do not rely on conduit as a grounding conductor.
- Secure all connections at the distribution panel(s) and outlets.
- Feed non-linear or electrically noisy loads (such as electronic lighting ballasts, motors, air conditioners and copying machines) from a separate panel if they are a significant part of your total load. Voltage transients from these loads can affect sensitive electronic controls or computer equipment.
- Install necessary **uninterruptible power supplies** for systems that depend on 100% power availability.
- Install necessary constant voltage transformers or other filtering devices for equipment requiring additional power conditioning.
- Install necessary equipment for systems that require controlled temperature and humidity.
- Install bypass metering to minimize interruptions due to meter servicing.

Phone Numbers and Addresses

Location of Your Project	Phone Number	PNM New Service Delivery Office
Alamogordo	575-443-6610	650 Fairgrounds Rd. Alamogordo, NM 88310
Albuquerque, Outside City Limits	505-241-3425	4201 Edith Blvd NE Albuquerque, NM 87107
Clayton	575-438-6958	97 Santa Fe Dr. Clayton, NM 88415
Deming	575-956-1451	524 North Gold Deming, NM 88030
Las Vegas	505-438-6958	4565 State Rd. 14 Santa Fe, NM 87505
Ruidoso	575-630-5400	1100 A Mechem Dr. Ruidoso, NM 88345
Sandoval County, Rio Rancho	505-241-3425	4201 Edith Blvd NE Albuquerque, NM 87107
Santa Fe, Outside City Limits*	505-438-6958	4565 State Rd. 14 Santa Fe, NM 87505
Silver City	575-956-1480	3815 N. Swan St. Silver City, NM 88061
Tribal Lands	PNM's nearest office	See PNM Territories, page ii
Valencia County, Belen, Los Lunas	505-241-4039	19377 Hwy 314 Belen, NM 87002

New Mexico One-Call "Call Before You Dig"
Albuquerque Local: 505-260-1990 or 811
Toll Free: 1-800-321-2537

*NOTE: Before serving property outside the city limits of Santa Fe, written verification is required from the County of Santa Fe Land Use Administrator that the property is in compliance with Santa Fe County Subdivision Regulation.

State or City Electric Permits

Inspector	Address	Phone Number
City of Albuquerque Electrical Section	600 Second St NW Albuquerque, NM 87102	505-924-3311
Bernalillo County Zoning Building and Planning Department	111 Union Square St SE, Suite 100 Albuquerque, NM 87102	505-314-0350
Clayton	State or City Electric Permits	505-222-9813 877-243-0979
Deming	State or City Electric Permits	505-222-9813 877-243-0979
New Mexico Construction/Manufactured Housing Division State Electrical Inspector (East Mountain, Sandoval and Valencia County)	5200 Oakland NE Albuquerque, NM 87113	505-222-9813 877-243-0979
Las Vegas	State Electrical Inspector	505-222-9813 877-243-0979
City of Rio Rancho Electrical Inspector	3900 Southern Blvd SE Rio Rancho, NM 87124	505-803-3379
City of Santa Fe Code Enforcement Division	200 Lincoln Avenue Santa Fe, NM 87501	505-955-6646
Electric Bureau, Construction Industries Division Santa Fe	2550 Cerrillos Rd. Santa Fe, NM 87505	505-476-4700
Tribal Lands	Contact your local tribal authority	

Single Family Homes: Electric Service Requirements

The Electric Service Guide in general is for PNM Service Territories (See page ii). Check with your new service representative to determine which steps are appropriate for your situation.

We want to work with you to supply your electrical needs.

This chapter focuses on the requirements for single family residential homeowners. We want to provide residential homeowners and their contractors with the information they need to plan and receive electric service. We want to work with you and assist you, so that this process works smoothly.

The procedures in this book enable a complex and regulated process to work for the many people involved.

The following procedures and requirements are necessary because they provide a structure that allows a complex process to be completed in a predictable and efficient manner. We realize that the successful construction of a home requires cooperation and scheduling among contractors, utilities, municipalities, banks and others. Therefore, we provide this document to

- promote mutual planning and scheduling
- promote fair and consistent treatment for you and your contractors
- ensure compliance with the requirements of the Public Regulation Commission
- coordinate with the requirements of local government inspection and permitting agencies regarding enforcement of the National Electrical Code (NEC), and the National Electrical Safety Code (NESC)
- ensure compliance with all applicable environmental laws

Our process to provide you with electricity is governed by several policies that are approved and monitored by the Public Regulation Commission. The complete text of these policies can be obtained from your new service representative. Most of these policies are included in summary form in the chapter of this document on “Policies”, page 61. In this chapter, we provide the important policy information that affects the residential homeowner.

All our procedures are developed to be in compliance with PNM Line Extension Policy or PNM-TNMP Line Extension Policy (LXP). These policies have been established to ensure that all customers, those desiring line extensions as well as existing rate payers, are treated fairly and consistently.

What you need to know about the Line Extension Policy:

- The Line Extension Policy governs the costs of building line extensions.
- You will need a line extension to provide electricity to your home.
- Your cost for a line extension is our estimated cost to design and build electric facilities to serve your development less any credits to which you are entitled.
- Initial credits are based on the policies
- The cost of connecting the home to the line extension is the installed cost of the meter, service wires, and connections at transformer, pedestal, and service entrance.
- More information on credits can be read further in this section. (See Policies, page 61)

Steps for You to Follow to Receive Electric Service for Your Home

The following steps tell you how to obtain electric service for your home. You should coordinate your need for construction power with your permanent line extension, and with your financing (if applicable). The following process will enable you to receive electric service. Don't forget to make arrangements for, and to plan service from, other utilities that you want to serve your home (for example, gas, phone, and/or cable television).

If electricity is currently available to your property this process may be greatly simplified.

If power is already available on your property, you may not have to complete all of the following steps. **Special consideration should be taken if installing or upgrading to 200 amp or greater service and/or adding a refrigerated air conditioning system.** Check with your new service representative to determine which steps are appropriate for your situation.

1. Plan for Your Electric Service

Plan the physical layout and schedule of your electric service.

Just as you must work with architectural plans for the construction of your home, we must develop plans for the power lines that will supply electricity to your home. Give consideration to where you would like the power to be delivered to your home, and the size of your electric service. Standard voltage for residential customers is 120/240 volt single-phase service. Talk to us if you have special voltage requirements.

- How much electricity will your home use?
- Where and when would you like the construction power delivered to your home?
- Where is the appropriate location for the meter?
- When do you plan to occupy your home?
- Do you plan on a home business? If so, consider bypass metering as shown on MS-2-5.0. This will allow PNM meter exchanges without interrupted service.

Consider how you will pay for your line extension.

Electric Line Extensions Are Not Free. You need to consider this cost in the financial planning for your new home.

- How much will your electric line extension cost including securing easements?
- What line extension costs will you need to consider while arranging the financing of your home?

Special consideration for remodels and additions:

- Will the existing meters and transformers accommodate additional load, **especially if changing cooling system from evaporative to refrigerated air conditioning?**
- If the existing service is provided from overhead transformers, will there be enough additional load to require padmount transformers?
- Will the meter location need to change?

Please be aware that all work requested after normal working hours and on weekends will be billed to the customer requesting this work on a non-refundable basis.

If you plan to do your own electrical work, be sure to acquire the proper permit.

If you plan to do the electrical wiring for your home yourself, you need to acquire a Homeowner's Permit from your local inspection authority. You must present them with a complete drawing of the proposed work, and a Recorded Warranty Deed or Real Estate Contract.

Any changes to the original design submitted to PNM could result in additional charges.

Call your new service representative for assistance.

Call your local PNM office (page 9) to request a new service representative to work with you in the planning stages of your project.

2. Submit Your Specification to Us

We need your specifications, so that we can design the electric facilities to serve you.

Electric service to your home can be a very complex process with many variables. Please discuss and coordinate your specifications with us as early as possible and provide us with all the following:

- recorded warranty deed and plat
- legal description and lot location
- house orientation on lot with distances from property lines
- driveway locations
- heated square feet
- type of heating and cooling system
- special electrical requirements
- existing easements on property
- proposed electric meter location
- utility authorization (Santa Fe only)
- service capacity-there are state and local requirements that require the stamp of an electrical engineer for some loads:
    - The state of New Mexico-when service capacity exceeds 100 kVA single-phase or 225 kVA three-phase requires plans, specifications and calculations to be stamped by an electrical engineer licensed to practice in New Mexico.
    - City of Albuquerque and Bernalillo county-when service capacity exceeds 200 amps for single-phase or 50 kVA for three-phase, the electrical design shall be prepared and sealed by a registered professional engineer, licensed to practice in the State of New Mexico.
    - Other cities or counties may have similar requirements. Check with your local inspection agencies. Refer to page 10 for phone numbers and addresses.

What you need to know about electric meter locations:

- We need to work with you to determine the meter location refer to drawing DS-4-3.0. Ask your new service representative for a Meter Location Request.
- Meters must be easily accessible for reading and maintenance.
- If the meter is installed on the side of your home, it must be within 10 feet of the street side of the house, but not behind stem walls, sidewalls, or other encumbrances.
- Refer to drawing MS-7-1.0 for required working clearances around meters. In communities with dedicated alleys, requirements may differ on your meter locations. Consult with your new service representative before final decisions are made on your meter location.

Make sure your building is a safe distance from overhead lines.

The National Electrical Safety Code (NESC) establishes the clearances that must be maintained between power lines and buildings, signs, and other structures. **These clearances must be maintained, regardless of easement boundaries**. When planning your building, be sure these required clearances are maintained (See drawing DS-13-2.0 in the back section of this book).

We will estimate the cost of the electrical facilities to serve you.

We will contact you to discuss your new services requirements and related costs. There are three types of service connections that can be designed, depending on your situation. They are

- overhead service from an overhead line
- customer-owned underground service from an overhead line
- underground service from an underground line

The customer will have the option to acquire their own private easements, which need to be verified by PNM at customer's expense. **The customer may request PNM to acquire these easements at the customer's expense, which will be paid in advance and is nonrefundable**. All easements or permits for governmental agencies must be acquired by PNM.

We will comply with applicable environmental laws. The responsible protection of natural and cultural resources is a part of the cost of a line extension. This process can be lengthy depending on resources affected and land jurisdiction.

Trenching

See Trenching Policy, page 76

3. Develop the Line Extension Agreement

The Line Extension Agreement is a contract for the cost of building the facilities for your electric service.

You will need to discuss your service options with your new service representative. We will let you know your cost for the permanent line extension that will serve you. You must pay our estimated cost to build the line extension, less any credits for which you are eligible. The types of credits available are explained in the following section.

Due to differences in the rules and regulations on file with the NMPRC between PNM and PNM-TNMP service territories credit calculations differ. See Policies, page 61 for PNM and PNM-TNMP service territories.

What you need to know about Lot Credits

When a line extension passes other unserved lots, the lot credit compensates the line extension customer for the service benefits to these lots.

There are several types of lot credits available to compensate the customer for benefits provided to other properties by the line extension.

Lot credits apply only to lots properly filed and recorded in the County Clerk's office. The customer will need to provide copies of this document to PNM in order to get this credit.

The lot credits include:

- **$400** for each lot made ready for a service drop from either overhead or underground lines.
- **$50** for each lot passed by the new underground backbone line, which will require padmount transformers and/or pedestals and/or secondary wire to provide future service.
- **$250** for each lot passed by the new overhead backbone line, which will require pole-mounted transformers and/or secondary wire to provide future service.
- **$150** for each lot made ready for a service drop by a new overhead transformer hung on an existing pole. This credit is in lieu of the $400 credit mentioned above.

The total credit given will never exceed PNM's bid or the Customer Built Option Cost, whichever is lower.

If the customer believes the revenue from his project will exceed that identified on the revenue credit tables, he may sign a Revenue Credit Guarantee Agreement to assume responsibility for meeting the higher revenue figure.

What you need to know about Revenue Credits

Up-front revenue credits will be determined by PNM.

In order to be eligible for revenue credits, final building plans must be provided to PNM.

Any lot receiving a revenue credits is not eligible for a lot credit.

Once defined, the revenue credit is firm. No revenue credit reconciliation will be made later.

A signed Revenue Credit Guarantee Agreement (RCGA) may be required for customers wishing to claim revenue amounts exceeding those normally identified in the company's Revenue Estimation Table. The RCGA is in the form of a signed agreement. The RCGA requires the customer to generate actual revenues, which meet or exceed the agreed-upon amount within the first 18 months of permanent electric service, or be billed for the difference. For further information on RCGA see your new service representative.

4. Make Payment for Electric Facilities

Your payment is the signal to schedule and construct the facilities to serve you.

PNM can schedule construction for the electric facilities we design to serve you once we have received applicable payments, agreements and permits. Construction scheduling is a critical stage in the construction of your home. The advance planning outlined in all the previous steps will enable us to meet your needs. At this time, you will probably start construction on your building, and you may need temporary service for construction power.

5. Construct Facilities to Receive Permanent Power

During the construction of your home, you need to build the facilities to receive permanent electricity. This section provides information about what you need to build. Although this section identifies requirements for most installations, all situations cannot be addressed in a book of this size. Please be sure to reach an agreement with your new service representative about your electric service facilities before you begin construction.

A. Overhead service from an overhead line,
B. Customer owned underground service from an overhead line,
C. Underground service from an underground line.
D. For installation across street right-of-way see new service representative.

The requirements for each of these situations are listed on the following pages. Go to the section that describes your situation.

What you need to know about electric permits:

- In order to provide for public safety, all electrical facilities must be inspected and permitted by the City, County, or State having jurisdiction.
- We cannot energize facilities that have not passed inspection by the appropriate jurisdictional authority.
- We will connect your service within 10-12 working days of the time we receive the permit and all the other conditions are met. Other conditions may include but are not limited to easement and right-of way, execution and completion of a line extension and permits.
- Your licensed electrical contractor can acquire and process your permit for electric service.

Don't forget to call before you dig.

You must call for identification of underground utilities before you do any digging. New Mexico has a "One Call" system that enables you to call one phone number, and have the location of all underground utilities marked. See page 6 for more information on One Call.

A. OVERHEAD SERVICE FROM AN OVERHEAD LINE

This explains what you own, install, and maintain.

You will furnish and install an appropriate point of attachment. We will install, own, and maintain the service wires up to the point of attachment on your structure. It is your responsibility to install and maintain all other wiring and equipment past the point of attachment, except for the electric meter.

You will install.

- service entrance riser and wiring beyond the point of attachment
- meter socket or enclosure

We will install.

- service drop
- transformer
- meter(s)

Requirements for your service riser and connections to your home.

Type of Installation		Single-Phase
Service entrance riser, service attachment to: (choose the one that fits your installation)	building	DS-4-3.0 or DS-4-4.0
	service pole	DS-4-8.0
meter socket or enclosure: (choose the one that fits your installation)	200 Amp	MS-2-2.0 or MS-2-5.0
	300 Amp	MS-3-7.0
	>300 Amp	MS-3-7.0
	ganged meters	MS-4-1.0

Underground services from overhead lines are explained here.

B. CUSTOMER-OWNED UNDERGROUND SERVICE FROM AN OVERHEAD LINE

This explains what you own, install, and maintain.

The underground service cables and conduit, (extending from the point of service on your premises to the point on our pole where the connection is to be made) will be designed, installed, owned, maintained, and paid for by you. It is your responsibility that your facilities meet the size and depth requirements of the National Electrical Code (NEC). All conduit runs must be unbroken and contain appropriately sized conductor. Contact your new service representative for the placement of the secondary service conduit attached to our distribution pole. The conduit must not interfere with telephone or cable television company attachments. No switches or attachments other than the continuous run of conduit shall be placed on the pole. We will connect your service cable at our pole and install the meter. You or your contractor is responsible for all other connections, easements and wiring.

You will install.

- riser at PNM pole including applicable pole ground assembly
- trench and conduit
- service wires
- meter socket or enclosure

We will install.

- transformer(s)
- meter(s)
- terminations at PNM pole

Requirements for connection to service pole.

The following is the requirement for the connection of your conduit to our pole.

Type of Installation		Single-Phase
Riser [1] at PNM's pole, trench, and conduit [2]		DS-4-9.0 or DS-4-10.0
meter socket or enclosure: (choose the one that fits your installation)	200 Amp	MS-2-2.0 or MS-2-5.0
	300 Amp	MS-3-7.0
	>300 Amp	MS-3-7.0
	pedestal meter	MS-5-2.0 or MS-5-3.0
	ganged meters	MS-4-1.0

NOTES:

1-We will specify the quadrant location for the riser on PNM's pole.
2-The service wire will be within a continuous unbroken conduit run without pullboxes.

Underground services from underground lines are explained here.

C. UNDERGROUND SERVICE FROM AN UNDERGROUND SYSTEM

This page identifies what you must install if you are receiving this type of service connection. This type of connection will normally be used if you are receiving service from an underground system.

You will install	We will install
-riser to meter socket with elbow and bushing	-service cable
-conductors to disconnect	-terminations at socket
	-meter and seal

Requirements for connection to home.

Select one of the following drawings, appropriate for the connection of the service to your home or pole.

- If the service will connect to your home, use DS-4-5.0.
- If the service is for a mobile home, use MS-5-2.0.

Refer to the following table to size the service entrance conduit for your home. Please contact your new service representative if you have any questions regarding conduit size.

Residential Underground Service Entrance Conduit Size (Internal Diameter)

Service Distance (ft)	*100A Class Meter Socket	200A Class Meter Socket	320A Class Meter Socket
100’ or Less	2.5”	2.5”	3”
Greater than 100’	3”	3”	3”

*Refer to MS-2-2.1.

Requirements for meter sockets.

Your meter socket can have a rating of 200 or 320 Amps.

- For a meter socket rated 200 Amps, use MS-2-2.0 or MS-2-5.0 (with the bypass feature).
- For a meter socket rated 320 Amps, use MS-3-7.0.

There are special considerations for landscaping areas with underground utilities.

Plan your schedule so that the construction of walls, fences, and driveways occurs after underground service installation. If walls, fences and driveways are constructed prior to the time the service connection is made, you may incur additional cost.

A conduit should be used for all driveways.

All grading operations shall be completed before we can trench. Proper coordination of landscape operations with construction can reduce costs for all involved.

Blank Page for Notes

Single Businesses: Electric Service Requirements

The Electric Service Guide in general is for PNM Service Territories (See page ii). Check with your new service representative to determine which steps are appropriate for your situation.

We want to work with you to supply your electrical needs.

This chapter focuses on the requirements for commercial businesses. Master metered apartments are considered to be a single commercial business. Requirements for individually metered apartments are discussed in a separate chapter. We want to provide our business customers and their contractors with the information they need to plan and receive electric service. We want to work with you and assist you, so that this process works smoothly.

The procedures in this book enable a complex and regulated process to work for the many people involved.

The following procedures and requirements are necessary, because they provide a structure that allows a complex process to be completed in a predictable and efficient manner. We realize that the successful development of a new business requires cooperation and scheduling among many entities, which could include contractors, utilities, municipalities, banks and others. Therefore, we provide this document to

- promote mutual planning and scheduling
- promote fair and consistent treatment for you and your contractors
- ensure compliance with the requirements of the Public Regulation Commission
- coordinate with the requirements of local government inspection and permitting regarding enforcement of the National Electrical Code (NEC), and the National Electrical Safety Code (NESC)
- ensure compliance with all applicable environmental laws

Our process to provide you with electricity is governed by several policies that are approved and monitored by the Public Regulation Commission. The complete text of these policies can be obtained from your new service representative. Most of these policies are included in summary form in the chapter of this document on “Policies”, page 61. In this chapter, we provide you with the important information from these policies that affects the single commercial businesses.

All our procedures are developed to be in compliance with the PNM Line Extension Policy or PNM-TNMP Line Extension Policy (LXP). These policies have been established to ensure that all customers, including those desiring line extensions and existing rate payer, are treated fairly and consistently. However, this LXP does not apply to customers, with expected loads greater than 500 kW and who will ultimately take electric service under PNM Rate Schedule 4B (Large Power), 5B (Industrial Power) or 4000B (United States Government Special Contract). **In such situations, line extensions and service agreements will be established on an individual basis.**

What you need to know about the Line Extension Policy:

- The Line Extension Policy governs the costs of building line extensions.
- You will need a line extension to provide electricity to your business.
- Your cost for a line extension is our estimated cost to design and build electric facilities to serve your development less any credits to which you are entitled.
- Initial credits are based on policies.
- The cost of connecting the business to the line extension is the installed cost of the meter, service wires, and connections at transformer, pedestal, and service entrance.
- More information on credits can be read further in this section. (See Policies, page 61)

Steps to Follow to Receive Electric Service for Your Business

The following steps tell you how to obtain electric service for your business. You should coordinate your need for construction power with your permanent line extension, and with your financing (if applicable). The following process will enable you to receive electric service. Don't forget to make arrangements for, and to plan service from, other utilities that you want to serve your business (for example, gas, phone, and/or cable television).

If electricity is currently available on your site this process is greatly simplified.

If power is already available on your property, you may not have to complete all of the following steps. **Special consideration should be taken if installing or upgrading to 300 amp or greater service and/or adding a refrigerated air conditioning system.** Check with your new service representative to determine which steps are appropriate for your situation.

1. Plan for Your Electric Service

Plan the physical layout and schedule of your electric service.

Just as you must work with architectural and engineering plans for the construction of a new building, we must develop plans for the power lines that will supply electricity to your business. Give consideration to where you would like the power to be delivered to your building and the size of your electric service.

- How much electricity will your business use including securing easements?
- Where and when would you like construction power delivered to your site?
- Where are the appropriate locations for the transformer and meter?
- When do you need permanent power to your building?

Special consideration for remodels and or additions:

- Will the existing meters and transformers accommodate additional load, **especially if changing cooling system from evaporative to refrigerated air conditioning?**
- If the existing service is provided from overhead transformers, will there be enough additional loads to require padmount transformers?
- Will the meter location need to change?

Please be aware that all work requested after normal working hours and on weekends will be billed to the customer requesting this work on a non-refundable basis.

We have many standard voltages to serve your needs.

The following list contains the available voltage options provided by PNM. The voltage that will best serve you depends on the maximum load to be served, the location of the load, the number of metering points, your future power requirements, the nature of your load, and your rate schedule. Your new service representative will work with you to determine how to best meet your needs.

- 120/240 volt, single-phase, three-wire pole-mounted transformer service for a demand of 50 kW or less, from an overhead system.
- 120/240 volt, single-phase, three-wire padmounted transformer service for a demand of 75 kW or less from a single-phase underground system or an overhead system.
- 240 volt, three-phase, four-wire pole-mounted transformer service for a demand of 125 kW or less, from an overhead system.
- Combination of 240 volt, three-phase, four-wire and 120/240 volt, single-phase, three-wire pole-mounted transformer service for a demand of 75 kW or less from an overhead system. With this type of service, individual single-phase or three-phase demands shall not exceed 50 kW.
- 120/208 volt, three-phase, four-wire padmounted transformer service with single point secondary metering for loads of 50 to 500 kW.
- 120/208 volt, three-phase, four-wire pole-mounted transformer service for a demand of 125 kW or less, from an overhead system.
- 277/480 volt, three-phase, four-wire pole-mounted transformer service for a demand of 125 kW or less, from an overhead system.
- 277/480 volt, three-phase, four-wire furnished for all loads in the Downtown and Urban Renewal Area in Albuquerque. Applies to all development in the area bounded by Lomas Avenue on the north, Lead Avenue on the south, the railroad tracks on the east, and 8th street on the west. This book does not contain requirements for electric service in this area. Contact your new service representative for electric service requirements.
- 277/480 volt, three-phase, four-wire padmounted transformer service with single point secondary metering for loads of 50 to 1,500 kW.
- For loads exceeding 500 kW, service may by mutual agreement be furnished at our available transmission or distribution voltage of 4,160 volts or higher. Primary metered service is not available for Customers who are going to further meter and distribute power to electrical systems not under the Customer's ownership and control.
- Three-phase commercial/industrial subdivisions designed to provide three-phase underground service are subject to certain restrictions for single-phase customers. Since these systems are designed to be operated as three-phase systems, the installation of single-phase transformers will not be permitted. Developers desiring the availability of single-phase service via single-phase transformers at certain properties may elect to have the system designed and constructed such that a separate cable is installed for single-phase service, in addition to the cables installed for the three-phase service.

Provide protection for single phase conditions, and design for available fault current.

If you are receiving three-phase electric service, it is your responsibility to provide protection for your motors against the possibility of single-phase operation. Also, please reference drawing DM-4-11.0 for the maximum available fault current associated with your chosen voltage. You will need this fault current information to properly size your service entrance equipment.

Consider how you will pay for your line extension.

Electric Line Extensions Are Not Free. You need to consider this cost in the financial planning for your business.

Any changes to the original design submitted to PNM could result in additional charges.

Call your new service representative for assistance.

Call your local PNM office (page 9) to request a new service representative to work with you in the planning stages of your project.

2. Submit Your Specifications to Us

We need your specifications so that we may design the electric facilities to serve you.

Electric service to your business can be a very complex process with many variables. Please discuss and coordinate your specifications with us as early as possible and provide us with the following:

- a complete set of plans as bid for construction, including architectural plans, grading plans, riser diagram (indicating the size and type of phase and neutral conductors), site plan, landscape plans, and electrical and mechanical drawings, with all specifications and calculations. Please provide any plats in digital format, if possible and provide us with the following:
- service entrance conductor size and numbers of runs
- main breaker panel rating
- interrupting rating of all disconnect devices
- connected NEC load and NEC estimated demand for each metering point
- service capacity-there are state and local requirements that require the stamp of an electrical engineer for some loads:
    - The state of New Mexico-when service capacity exceeds 100 kVA single-phase or 225 kVA three-phase, requires plans, specifications and calculations to be stamped by an electrical engineer licensed to practice in New Mexico.
    - City of Albuquerque and Bernalillo county-when service capacity exceeds 200 amps for single-phase or 50 kVA for three-phase, the electrical design shall be prepared and sealed by a registered professional engineer, licensed to practice in the State of New Mexico.
    - Other cities or counties may have similar requirements. Check with your local inspection agencies. Refer to page 10 for phone numbers and addresses.
- legal description and lot location with recorded warranty deed of conveyance to owner
- building orientation on lot with distances from property lines
- existing easements on property
- for primary meters, see page 33 for special submittal requirements
- proposed electric meter location
- specification's on customer generation systems (See policy on page 88)
- The customer is only allowed a single point of service for grouped or ganged metering on each building

Electric meter and transformer locations are sensitive issues during construction. Please let your business tenants know that there are limitations regarding electric meter and transformer locations.

What you need to know about transformer and electric meter locations:

- Refer to drawing DS-4-3.0 for transformer and meter locations.
- Ask your new service representative for a meter and transformer locations.
- Meters must be easily accessible for reading and maintenance.
- Transformers must be easily accessible for operation and maintenance.
- Refer to drawing MS-7-1.0 and MS-7-2.0 for required working clearance around metering installations.
- Refer to drawing DS-7-16.12 for required working clearance around transformers.

Make sure your facilities are a safe distance from overhead lines.

The National Electrical Safety Code (NESC) establishes clearance that must be maintained between power lines and buildings, signs, and other structures. **These clearances must be maintained regardless of easement boundaries**. When planning your facilities, please work with us to ensure that these required clearances are maintained.

We will estimate the cost of the electrical facilities to serve you.

We will contact you to discuss your new services requirements and related costs. There are three types of service connections that can be designed, depending on your situation. They are

- overhead service from an overhead line
- customer-owned underground service from an overhead line
- underground service from an underground line

The customer will have the option to acquire their own private easements, which need to be verified by PNM at customer's expense. **The customer may request PNM to acquire these easements at the customer's expense, which will be paid in advance and is nonrefundable**. All easements or permits for governmental agencies must be acquired by PNM.

We will comply with applicable environmental laws. The responsible protection of natural and cultural resources is a part of the cost of a line extension. This process can be lengthy depending on resources affected and land jurisdiction.

Trenching

See Trenching Policy, page 76

3. Develop Line Extension Agreement

The Line Extension Agreement is a contract for the cost of the line extension that will serve you.

You will need to make some decisions before the Agreement can be completed. We will let you know your cost for the permanent line extension that will serve you. You must pay our estimated cost to build the line extension, less any credits for which you are eligible. The two types of credits available are explained in the following section.

Due to differences in the rules and regulations on file with the NMPRC between PNM and PNM-TNMP service territories credit calculations differ. See Policies page 61 for PNM and PNM-TNMP service territories.

What you need to know about Lot Credits

When a line extension passes other unserved lots, the lot credit compensates the line extension customer for the service benefits to these lots.

There are four types of lot credits available to compensate the customer for benefits provided to other properties by the line extension.

Lot credits apply only to lots properly filed and recorded in the County Clerk's office. The customer will need to provide copies of this document to PNM in order to get this credit.

The lot credits include:

- **$400** for each lot made ready for a service drop from either overhead or underground lines.
- **$50** for each lot passed by the new underground backbone line, which will require padmount transformers and/or pedestals and/or secondary wire to provide future service.
- **$250** for each lot passed by the new overhead backbone line, which will require pole-mounted transformers and/or secondary wire to provide future service.
- **$150** for each lot made ready for a service drop by a new overhead transformer hung on an existing pole. This credit is in lieu of the $400 credit mentioned above.

The total credit given will never exceed PNM's bid or the Customer Built Option Cost, whichever is lower.

What you need to know about Revenue Credits

If the customer believes the revenue from his project will exceed that identified on the revenue credit tables, he may sign a Revenue Credit Guarantee Agreement to assume responsibility for meeting the higher revenue figure.

Up-front revenue credits will be determined by PNM. **Revenue credits do <u>not</u> apply for customer with loads greater than 500 kW. For this type of service, please see your new service representative regarding investment credit criteria and requirements.**

In order to be eligible for revenue credits, final building plans must be provided to PNM.

Any lot receiving a revenue credit is not eligible for a lot credit.

Once defined, the revenue credit is firm. No revenue credit reconciliation will be made later.

A signed Revenue Credit Guarantee Agreement (RCGA) may be required for customers wishing to claim revenue amounts exceeding those normally identified in the company's Revenue Estimation Table. The RCGA is in the form of a signed agreement. The RCGA requires the customer to generate actual revenues, which meet or exceed the agreed-upon amount within the first 18 months of permanent electric service, or be billed for the difference. For further information on RCGA see your new service representative

4. Make Payment for Electric Facilities

Your payment is the signal to schedule and construct the facilities to serve you.

PNM can schedule construction for the electric facilities we design to serve you once we have received applicable payments, agreements and permits. Construction scheduling is a critical stage in the construction of your building. The advance planning outlined in all the previous steps will enable us to meet your needs. At this time, you will probably start construction on your building, and you may need temporary service for construction power.

5. Construct Facilities to Receive Permanent Power

During the construction of your building, you need to build the facilities to receive permanent electricity. This section provides information about what you need to build. Although this section identifies requirements for most installations, all situations cannot be addressed in a book of this size. Please be sure to reach an agreement with your new service representative about your electric service facilities before you begin construction.

The facilities you need to install to receive electricity depend upon the type of service connection, the voltage you want to receive, and the size of your load. The following pages define our mutual construction responsibilities and list references to other drawings in this book for the facilities that you will install. Each page has the requirements for a different service connection as identified in the following list:

A. Overhead Service from an Overhead Line;
B. Customer-Owned Underground Service from an Overhead Transformer Bank;
C. Padmount Transformer Service via a Primary Riser from an Overhead Line;
D. Padmount Transformer Service in an Underground Looped Area;
E. Primary Metered Service.
F. Serving Commercial Customers across the Street Right-of-Way from an Overhead System.

What you need to know about electric permits:

- In order to provide for public safety, all electrical facilities must be inspected and permitted by the City, County, or State having jurisdiction.
- We cannot energize facilities that have not passed inspection by the appropriate jurisdictional authority.
- We will connect your service within 10-12 working days of the time we receive the permit.
- Your licensed electrical contractor can acquire and process your permit for electric service.

Don't forget to Call Before You Dig.

You must call for identification of underground utilities before you do any digging. New Mexico has a "One Call" system that enables you to call one phone number, and have the location of all underground utilities marked. See page 6 for more information on One Call.

A. Overhead Service from an Overhead Line

This explains what you own, install, and maintain.

You will furnish and install an appropriate point of attachment. We will install, own, and maintain the service wires up to the point of attachment on your structure. It is your responsibility to install and maintain all other wiring and equipment past the point of attachment, except for the electric meter. The following information cannot cover all situations, so be sure to verify your requirements with your new service representative.

You will install

- service entrance riser and wiring beyond the point of attachment
- meter socket or enclosure

We will install

- service drop
- transformer(s)
- meter(s)

The following table references drawings in this book for your facilities.

Requirements for your service riser and connections to your business.

Type of Installation		Single-Phase	Three-Phase
Service entrance riser, service attachment to: (choose the one that fits your installation)	building	DS-4-3.0 or DS-4-4.0	DS-4-3.0 or DS-4-4.0
	service pole	DS-4-8.0	*
meter socket or enclosure: (choose the one that fits your installation)	200 Amp	MS-2-5.0	MS-2-6.0
	300 Amp	MS-3-7.0	MS-3-8.0 A
	>300 Amp	MS-3-7.0	MS-3-7.5 MS-3-10.0
	ganged meters	MS-4-1.0	*

* Please contact your new service representative for information.

B. Customer-Owned Underground Service from an Overhead Transformer Bank

It is your responsibility that your facilities meet the size and depth requirements of the National Electrical Code (NEC). The conduit must not interfere with telephone or cable television company attachments. No switches or attachments other than the continuous run of conduit shall be placed on the pole. We will connect your service cable at our pole and install the meter. You or your contractor is responsible for all other connections, easements and wiring.

You will install

- riser at PNM pole including applicable pole ground assembly
  pole ground assembly
- trench and conduit
- service wires
- meter socket or enclosure

We will install

- transformer(s)
- meter(s)
- terminations at PNM pole

The following table references drawings in this book for your facilities.

Requirements for your service riser and connections to your business.

Type of Installation		Single-Phase	Three-Phase
Riser [1] at PNM's pole, trench, and conduit [2]		DS-4-9.0 or DS-4-10.0	DS-4-9.5
meter socket or enclosure: (choose the one that fits your installation)	200 Amp	MS-2-5.0	MS-2-6.0
	300 Amp	MS-3-7.0	MS-3-8.0 A
	>300 Amp	MS-3-7.0	MS-3-7.5 MS-3-10.0
	pedestal meter	MS-5-3.0 or MS-5-2.0	MS-5-5.0 or MS-5-3.0
	ganged meters	MS-4-1.0	*

* Please contact your new service representative for information.

NOTES:

1 - We will specify the quadrant location for the riser on PNM's pole.
2 - The service wire will be within a continuous unbroken conduit run without pullboxes.

C. Padmount Transformer Service via a Primary Riser from an Overhead Line

This section identifies what you must install if you are receiving this type of service connection to one padmount transformer. You will own and maintain the facilities that you are responsible for installing. References to other drawings in this book are provided where applicable. The following information cannot cover all situations, so be sure to verify your requirements with your new service representative. **Your site should be at final grade, and you must stake the location for electric facilities before we begin construction.** Your requirements will be documented in a Standard Procedures letter that you will receive after you submit your plans to us, and before you sign an Electric Line Extension Agreement.

You will install

- riser at PNM pole
- trench and primary conduit with pull string [1]
- secondary wires and conduit [2] between the transformer and meter
- transformer pad
- meter pad (if required)
- meter socket or enclosure

We will install

- primary cable and terminations
- transformer and terminations
- metering

The following table references drawings in this book for your facilities.

Requirements for your service riser and connections to your business.

Type of Installation		Single-Phase	Three-Phase
Riser [3] at PNM's pole, trench, and conduit [4]		DS-7-14.0	DS-7-15.0
transformer pad [5]		DS-7-16.1	DS-7-16._*
meter pad (if required)		NA	DS-7-16._* or MS-3-16.0
meter socket or enclosure: (choose the one that fits your installation)	200 Amp	MS-2-5.0	MS-2-6.0
	300 Amp	MS-3-7.0	MS-3-8.0
	>300 Amp	MS-3-7.0	MS-3-10.0 MS-3-11.0 [6]
	pedestal meters	MS-5-3.0 or MS-5-2.0	MS-5-5.0 or MS-5-3.0
	ganged meters	MS-4-1.0	*

* Please contact your new service representative for information.

NOTES:
1 - For installation across street right-of-way contact your new service representative.
2 - The cable from the transformer to the meter socket or enclosure will be within a continuous unbroken conduit run.
3 - We will specify the quadrant location for the riser on PNM's pole.
4 - Trench and PVC conduit must be inspected and approved before concrete is poured. Rigid galvanized or IMC conduit may be used, but must be inspected and approved before backfilling.
5 - Transformer pad form, conduit placement, and pad location must be inspected and approved by PNM before concrete is poured.
6 - Enclosures must be delivered to the local PNM Service Center. We will pre-wire the enclosure and deliver to your construction site. Please allow 10 working days for us to pre-wire the meter enclosure.

D. Padmount Transformer Service in an Underground Looped Area

This section identifies what you must install if you are receiving this type of service connection. This type of connection will normally be used if you are receiving service from more than one padmount transformer. You will own and maintain the facilities that you are responsible for installing. References to other drawings in this book are provided where applicable. The following information cannot cover all situations, so be sure to verify your requirements with your new service representative. **Your site must be at final grade, and you must stake the location for electric facilities before we begin construction.** Your requirements will be documented in a Standard Procedures letter that you will receive after you submit your plans to us, and before you sign an Electric Line Extension Agreement.

You will install

- secondary wires, trench, and conduit [1] between the transformer and meter
- transformer pad and conduit stub outs
- meter pad (if required)
- meter socket or enclosure

We will install

- primary cable and trench [2]
- transformer
- terminations at transformer
- meter(s)
- primary riser

The following table references drawings in this book for your facilities.

Type of Installation		Single-Phase	Three-Phase
transformer pad [3] and conduit stubouts [4]		DS-7-16.1	DS-7-16.7 or DS-7-17.6
meter pad (if required)		NA	DS-7-17.6 or MS-3-16.0
meter socket or enclosure: (choose the one that fits your installation)	200 Amp	MS-2-5.0	MS-2-6.0
	300 Amp	MS-3-7.0	MS-3-8.0
	>300 Amp	MS-3-7.0	MS-3-10.0 MS-3-11.0 [5]
	pedestal meter	MS-5-3.0 or MS-5-2.0	MS-5-5.0 or MS-5-3.0
	ganged meters	MS-4-1.0	*

* Please contact your new service representative for information.

NOTES:

1 - The cable from the service entrance to the meter socket will be within a continuous unbroken conduit run.
2 PNM will not provide trench for joint utilities.
3 - Transformer pad form, conduit placement, and pad location must be inspected and approved by PNM before concrete is poured.
4 - Two 4 inch primary conduit stubouts as specified by PNM. Conduits must be buried a minimum of 42 inches, extend a minimum of 5 feet beyond the edge of the equipment pad, and capped at both ends.
5 - Enclosures must be delivered to the local PNM Service Center. We will pre-wire the enclosure and deliver to your construction site. Please allow 10 working days for us to pre-wire the meter enclosure.

E. Primary Metered Service

This page identifies what you must install if you are receiving this type of service connection. You will own and maintain the facilities that you are responsible for installing. References to other drawings in this book are provided where applicable. The following information cannot cover all situations, so be sure to verify your requirements with your new service representative.

This type of connection requires special submittals during the planning stages of your project. At least 90 days prior to the construction start date, provide us with

- drawings showing the location and arrangement of required PNM facilities, your service entrance equipment and conductors, and information on easements and right-of-way
- one line diagram of the proposed electrical system stamped by an electrical engineer licensed in the State of New Mexico
- manufacturer, catalog number, and electrical ratings of gang-operated primary loadbreak/disconnect switch
- manufacturer and type of overcurrent protective device
- electrical time-current characteristic curves of proposed overcurrent protective devices

Overhead Primary Metered Service - This situation is rare and is therefore not addressed in this book. Contact your new service representative if you desire this type of service.

Underground Primary Metered Service

You will install the following:

- Trench and conduit from our switchgear or riser pole to your metering enclosure and your gang operated primary load break disconnect switch. We will specify the quadrant for the riser on PNM's pole. For installation under street right-of-way see new service representative.
- Primary cables and terminations from the load side of the primary meter to the load break disconnect switch.
- Primary meter enclosure (MS-3-17.0 with MS-2-7.0 or MS-3-3.0), which must be delivered to the local PNM Service Center. We will pre-wire the enclosure and deliver to your construction site. Please allow 10 working days for us to pre-wire the meter enclosure.
- Meter enclosure pad per MS-3-21.0 and MS-7-2.0.
- Metal-enclosed three-phase gang-operated load break disconnect switch, which must be on the load side of the meter. Switch must be accessible, readily and safely operable by untrained personnel, and must be mechanically interlocked to prevent access to energized parts in the main overcurrent device.
- Metal-enclosed main overcurrent device or feeder overcurrent device on the load side of the switch (DS-7-15.1). Interlocks must be provided in accordance with the NEC to prevent access to energized parts if the switch is closed.
- All other devices on the load side of the primary meter.

We will install and/or provide primary metering, cable and terminations from our system to the line side of the primary metering equipment, and review and approval of your overcurrent protection.

F. Serving Commercial Customers across the Street Right-of-Way from an Overhead System.

In an area where the local governing ordinances do not allow building of overhead lines, and when a radial extension makes sense, line extensions to commercial customers from an overhead system located on the opposite side of the street shall be constructed as follows:

We will install:

1) PNM will install a new or use an existing pole whichever is most cost effective to build a riser, then will install schedule 40 PVC conduit from the base of riser pole crossing the street (via boring and/or trenching) to the customer property line per DSC section 7 applicable drawings. The property line is defined as the separation point between PNM conduit and customer owned conduit. This designates who is responsible for the maintenance of the conduit if something should ever happen to it.

2) PNM will install a pull box if necessary on customer property line based on technical or operational calculations or procedures respectively (i.e. cable pulling calculations and cable replacement cost evaluations due to a cable fault or conduit damage). Pullbox installation in the customer property must be located where it can be easily accessible by line truck.

3) PNM will install transformer and meter. Transformer installation in the customer property must be located where it can be easily accessible by line truck.

4) PNM will pull and terminate the cables from transformer primary compartment to the top of riser pole.

You will install:

1) Customer shall continue the schedule 40 PVC conduit from the property line to the transformer primary compartment per DSC section 7 applicable drawings.

2) Customer shall install transformer pad based per DSC section 7 applicable drawings and construction letter.

Multiple Leased Residential Units: Electric Service Requirements

The Electric Service Guide in general is for PNM Service Territories (See page ii). Check with your new service representative to determine which steps are appropriate for your situation.

We want to work with you to supply your electrical needs.

This chapter focuses on the requirements for apartments and mobile home parks with individually metered residential units. Master metered apartments are treated as a single business, and their electric service requirements are discussed in the chapter about single businesses. We want to provide our apartment developers and their contractors with the information they need to plan and receive electric service. We want to work with you and assist you, so that this process works smoothly.

The procedures in this book enable a complex and regulated process to work for the many people involved.

The following procedures and requirements are necessary because they provide a structure that allows a complex process to be completed in a predictable and efficient manner. We realize that the successful construction of apartments requires cooperation and scheduling among many entities, which could include contractors, utilities, municipalities, banks and others. Therefore, we are providing this document to

- promote mutual planning and scheduling
- promote fair and consistent treatment for you and your contractors
- ensure compliance with the requirements of the Public Regulation Commission
- coordinate with the requirements of local government inspection and permitting agencies regarding enforcement of the National Electrical Code (NEC), and the National Electrical Safety Code (NESC)
- ensure compliance with all applicable environmental laws

Our process to provide you with electricity is governed by several policies that are approved and monitored by the Public Regulation Commission. The complete text of these policies can be obtained from your new service representative. Most of these policies are included in summary form in the chapter of this document on “Policies”, page 61. In this chapter, we provide you with the important information from these policies that affects the apartment developer.

All our procedures are developed to be in compliance with the PNM Line Extension Policy or PNM-TNMP Line Extension Policy (LXP). This policy is established to ensure that all customers, including those desiring line extensions and existing rate payers, are treated fairly and consistently. However, this LXP does not apply to customers with expected loads greater than 500kW and who will ultimately take electric service under PNM Rate Schedule 4B (Large Power), 5B (Industrial Power) or 4000B (United States Governmental Special Contract)**. In such situations, line extensions and service agreements will be established on an individual basis.**

What you need to know about the Line Extension Policy:

- The Line Extension Policy governs the costs of building line extensions.
- You will need a line extension to provide electricity to your apartments.
- Your cost for a line extension is our estimated cost to design and build electric facilities to serve your development less any credits to which you are entitled.
- Initial credits are based on the policies.
- The cost of connecting the apartment to the line extension is the installed cost of the meter, service wires, and connections at transformer, pedestal, and service entrance.
- More information on credits can be read further in this section. (See Policies, page 61)

Steps to Follow to Receive Electric Service for Your Individually Metered Apartments

The following process will enable you to receive electric service for your apartments. Don't forget to make arrangements for, and to plan service from other utilities that you want to serve your apartments (for example, gas, telephone, and/or cable television).

You may want to coordinate your need for construction power with your permanent line extension.

If electricity is currently available on your site this process may be greatly simplified.

If power is already available on your property, you may not have to complete all of the following steps. Check with your new service representative to determine which steps are appropriate for your situation.

1. Plan for Your Electric Service

Plan the physical layout and schedule of your electric service.

Just as you must work with architectural and engineering plans for the construction of your apartment building, we must develop plans for the power lines that will supply electricity to your apartments. Give consideration to where you would like the power to be delivered to your building and the size of your electric service.

- How much electricity will your apartments or mobile home use?
- Where and when would you like construction power delivered to your site?
- Where are the appropriate locations for the transformer and meter?
- When do you need permanent power?

We have many standard voltages to serve your needs.

The following list shows the available voltages for apartment developers. The voltage that will best serve you depends on the maximum load to be served, the location of the load, the number of metering points, your future power requirements, the nature of your load, and your rate schedule. Your new service representative will work with you to determine how to best meet your needs.

- 120/240 volt, single-phase, three-wire pole-mounted transformer service for a demand of 50 kW or less, from an overhead system.
- 120/240 volt, single-phase, three-wire padmounted transformer service for a demand of 75 kW or less from a single-phase underground system or an overhead system.
- 120/208 volt, three-phase, four-wire padmounted transformer service for loads of 50 to 500 kW.
- 120/208 volt, three-phase, four-wire pole-mounted transformer service for a demand of 125 kW or less, from an overhead system.

Provide protection for single-phase conditions, and design for available fault current.

If you are receiving three-phase electric service, it is your responsibility to provide protection for your motors against the possibility of single-phase operation. Also, please reference drawing DM-4-11.0 for the maximum available fault current associated with your chosen voltage. You will need this fault current information to properly size your service entrance equipment.

Consider how you will pay for your line extension.

Electric Line Extensions Are Not Free. You need to consider this cost in the financial planning for your apartments.

Any changes to the original design submitted to PNM could result in additional charges.

Call your new service representative for assistance.

Call your local PNM office (page 9) to request a new service representative to work with you in the planning stages of your project.

2. Submit Your Specifications to Us

We need your specifications so that we may design the electric facilities to serve you.

Electric service to apartments can be a very complex process with many variables. Please discuss and coordinate your specifications with us as early as possible and provide us with the following:

- a complete set of plans as bid for construction, including architectural plans, grading plans, riser diagram (indicating the size and type of phase and neutral conductors), site plan, landscape plans, and electrical and mechanical drawings, with all specifications and calculations. Please provide any plats in electronic format.
- service entrance conductor size and numbers of runs, if applicable (we must work with you to determine the number and size of conduits)
- main breaker panel rating
- interrupting rating of all disconnect devices
- connected NEC load and NEC estimated demand for each metering point
- service capacity-there are state and local requirements that require the stamp of an electrical engineer for some loads:
    - The state of New Mexico-when service capacity exceeds 100 kVA single-phase or 225 kVA three-phase, requires plans, specifications and calculations to be stamped by an electrical engineer licensed to practice in New Mexico.
    - City of Albuquerque and Bernalillo county-when service capacity exceeds 200 amps for single-phase or 50 kVA for three-phase, the electrical design shall be prepared and sealed by a registered professional engineer, licensed to practice in the State of New Mexico.
    - Other cities or counties may have similar requirements. Check with your local inspection agencies. Refer to page 10 for phone numbers and addresses.
- legal description and lot location with recorded warranty deed of conveyance to owner
- building orientation on lot with distances from property lines
- existing easements on property
- proposed electric transformer and meter locations
- the customer is allowed a single point of service for grouped or ganged metering on each building

What you need to know about transformer and electric meter locations:

- We need to work with you to determine the transformer and meter locations. Ask your new service representative for meter and transformer locations.
- Meters must be easily accessible for reading.
- Transformers must be easily accessible by truck for operation and maintenance.
- Refer to drawing MS-7-1.0 for required working clearance around meters.
- Refer to drawing DS-7-16.12 for required working clearance around transformers.

Make sure your facilities are a safe distance from overhead lines.

The National Electrical Safety Code (NESC) establishes clearances that must be maintained between power lines and buildings, signs, and other structures. **These clearances must be maintained regardless of easement boundaries**. When planning your facilities, please work with us to ensure that these required clearances are maintained.

We will estimate the cost of the electrical facilities to serve you.

We will contact you to discuss your new services requirements and related costs. There are three types of service connections that can be designed, depending on your situation. They are:

- overhead service from an overhead line
- customer-owned underground service from an overhead line
- underground service from an underground line

The customer will have the option to acquire their own private easements, which need to be verified by PNM at customer's expense. **The customer may request PNM to acquire these easements at the customer's expense, which will be paid in advance and is nonrefundable**. All easements or permits for governmental agencies must be acquired by PNM.

We will comply with applicable environmental laws. The responsible protection of natural and cultural resources is a part of the cost of a line extension. This process can be lengthy depending on resources affected and land jurisdiction.

Trenching

See Trenching Policy, page 76.

3. Develop Line Extension Agreement

The Line Extension Agreement is a contract for the cost of the line extension that will serve you.

You will need to discuss your service options with your new service representative. We will let you know your cost for the permanent line extension that will serve you. You must pay our estimated cost to build the line extension, less any credits for which you are eligible. The two types of credits available are explained in the following section.

Due to differences in the rules and regulations on file with the NMPRC between PNM and PNM-TNMP service territories credit calculations differ. See Policies page 61 for PNM and PNM-TNMP service territories.

What you need to know about Lot Credits

When a line extension passes other unserved lots, the lot credit compensates the line extension customer for the service benefits to these lots.

There are four types of lot credits available to compensate the customer for benefits provided to other properties by the line extension:

Lot credits apply only to lots properly filed and recorded in the County Clerk's office. The customer will need to provide copies of this document to PNM in order to get this credit.

The lot credits include:

- **$400** for each lot made ready for a service drop from either overhead or underground lines.
- **$50** for each lot passed by the new underground backbone line, which will require padmount transformers and/or pedestals and/or secondary wire to provide future service.
- **$250** for each lot passed by the new overhead backbone line, which will require pole-mounted transformers and/or secondary wire to provide future service.
- **$150** for each lot made ready for a service drop by a new overhead transformer hung on an existing pole. This credit is in lieu of the $400 credit mentioned above.

The total credit given will never exceed PNM's bid or the Customer Built Option Cost, whichever is lower.

What you need to know about Revenue Credits

If the customer believes the revenue from his project will exceed that identified on the revenue credit tables, he may sign a Revenue Credit Guarantee agreement to assume responsibility for meeting the higher revenue figure.

Up-front revenue credits will be determined by PNM.

In order to be eligible for revenue credits, final building plans must be provided to PNM.

Any lot receiving a revenue credit is not eligible for a lot credit.

Once defined, the revenue credit is firm. No revenue credit reconciliation will be made later.

A signed Revenue Credit Guarantee Agreement (RCGA) may be required for customers wishing to claim revenue amounts exceeding those normally identified in the company's Revenue Estimation Table. The RCGA is in the form of a signed agreement. The RCGA requires the customer to generate actual revenues, which meet or exceed the agreed-upon amount within the first 18 months of permanent electric service, or be billed for the difference. For further information on RCGA see your new service representative

4. Make Payment for Electric Facilities

Your payment is the signal to schedule and construct the facilities to serve you.

PNM can schedule construction for the electric facilities we design to serve you once we have received applicable payments, agreements and permits. Construction scheduling is a critical stage in the construction of your building. The advance planning outlined in all the previous steps will enable us to meet your needs. At this time, you will probably start construction on your apartment, and you may need temporary service for construction power.

5. Construct Facilities to Receive Permanent Power

During the construction of your apartments, you need to build the facilities to receive permanent electricity. This section provides information about what you need to build. Although this section identifies requirements for most installations, all situations cannot be addressed in a book of this size. Please be sure to reach an agreement with your new service representative about your electric service facilities before you begin construction.

The facilities you need to install to receive electricity depend upon the location of your project, the type of service connection, the voltage you want to receive, and the size of your load. The following pages define our mutual construction responsibilities and list references to other drawings in this book for the facilities that you will install. Each page has the requirements for a different service connection as identified in the following list:

A. Overhead Service from an Overhead Line
B. Customer-Owned Underground Service from an Overhead Transformer Bank
C. Padmount Transformer Service via a Primary Riser from an Overhead Line
D. Padmount Transformer Service in an Underground Looped Area

Different rules govern the provision of service to non-residential loads within your complex.

Non-residential loads, such as laundry rooms, gymnasiums, or leasing offices within your apartment complex must be served in compliance with the Line Extension Policy rules for single businesses. Please discuss service options with your new service representative, to determine your options and cost for serving these loads.

What you need to know about electric permits:

- In order to provide for public safety, all electrical facilities must be inspected and permitted by the City, County, or State having jurisdiction.
- We cannot energize facilities that have not passed inspection by the appropriate jurisdictional authority.
- We will connect your service within 10-12 working days of the time we receive the permit and all the other conditions are met. Other conditions may include but are not limited to easement and right-of way, execution and completion of a line extension and permits.
- Your licensed electrical contractor can acquire and process your permit for electric service.

Don't forget to Call Before You Dig.

You must call for identification of underground utilities before you do any digging. New Mexico has a "One Call" system that enables you to call one phone number, and have the location of all underground utilities marked. See page 6 for more information on One Call.

The apartments are allowed a single point of service for grouped or ganged metering on each building. The Leased Mobile-Home Park must contact their new service representative to obtain gang and grouped meter instructions and meter spot.

A. Overhead Service from an Overhead Line

This page identifies what you must install if you are receiving this type of service connection. You will own and maintain the facilities that you are responsible for installing. References to other drawings in this book are provided where applicable. The following information cannot cover all situations, so be sure to verify your requirements with your new service representative.

You will install

- service entrance riser and wiring to point of attachment
- meter socket or enclosure

We will install

- service drop
- transformer(s)
- meter(s)

The following table references drawings in this book for your facilities.

Type of Installation	Single-Phase	Three-Phase
service entrance riser, service attachment to building	DS-4-3.0 or DS-4-4.0	DS-4-3.0 or DS-4-4.0
meter sockets	MS-4-1.0	MS-2.0

B. Customer-Owned Underground Service from an Overhead Transformer Bank

The underground service cables and conduit, (extending from the point of service on your premises to the point on our pole where the connection is to be made) will be designed, installed, owned, maintained, and paid for by you. It is your responsibility that your facilities meet the size and depth requirements of the National Electrical Code (NEC). All conduit runs must be unbroken and contain appropriately sized conductor. Contact your new service representative for the placement of the secondary service conduit attached to our distribution pole. The conduit must not interfere with telephone or cable television company attachments. No switches or attachments other than the continuous run of conduit shall be placed on the pole. We will connect your service cable at our pole and install the meter. You or your contractor is responsible for all other connections, easements and wiring.

You will install

- riser at PNM pole including applicable pole ground assembly
- trench and conduit
- service wires
- meter sockets

We will install

- transformer(s)
- meter(s)
- terminations at PNM pole

The following table references drawings in this book for your facilities.

Type of Installation	Single-Phase	Three-Phase
Riser [1] at PNM's pole, trench, and conduit [2]	DS-4-9.0	DS-4-9.5
meter sockets	MS-4-1.0	MS-4-2.0

NOTES:

1 - We will specify the quadrant location for the riser on PNM's pole.
2 - The conductor and conduct will be a continuous unbroken run without pullboxes.

C. Padmount Transformer Service via a Primary Riser from an Overhead Line

This page identifies what you must install if you are receiving this type of service connection to one padmount transformer. You will own and maintain the facilities that you are responsible for installing. References to other drawings in this book are provided where applicable. The following information cannot cover all situations, so be sure to verify your requirements with your new service representative. **Your site should be at final grade, and you must stake the location for electric facilities before we begin construction.** Your requirements will be documented in a Standard Procedures letter that you will receive after you submit your plans to us, and before you sign an Electric Line Extension Agreement.

You will install	We will install
-riser at PNM pole	-primary cable and termination
-trench and primary conduit with pull string	-secondary wires between the transformer and meter
-secondary conduit [1] with pullstring between the transformer and meter	-transformer and terminations
-transformer pad	-metering
-meter sockets	

The following table references drawings in this book for your facilities.

Type of Installation	Single-Phase	Three-Phase
Riser [2] at PNM's pole, trench, and conduit [3]	DS-7-14.0	DS-7-15.0
transformer pad [4] and conduit stub outs [5]	DS-7-16.1	DS-7-16._*
meter sockets	MS-4-1.0	MS-4-2.0 [6]

* Please contact your new service representative for information.

NOTES:

1 - The conductor and conduct will be a continuous unbroken run without pullboxes.
2 - We will specify the quadrant location for the riser on PNM's pole.
3 - Trench and conduit must be inspected and approved before concrete (where required) is poured. Rigid galvanized, IMC or Schedule 40 (min.) PVC conduit may be used, but must be inspected and approved before backfilling.
4 - Transformer pad form, conduit placement, and pad location must be inspected and approved by PNM before concrete is poured.
5 - One primary conduit stub out as specified by PNM. Conduit must be buried a minimum of 42 inches, extend a minimum of 5 feet beyond the edge of the equipment pad, and be capped at both ends.
6 - Use this meter socket for 120/208 volt single-phase service from a three-phase transformer.

D. Padmount Transformer Service in an Underground Looped Area

This page identifies what you must install if you are receiving this type of service connection. This type of connection will normally be used if you are receiving service from more than one padmount transformer. You will own and maintain the facilities that you are responsible for installing. References to other drawings in this book are provided where applicable. The following information cannot cover all situations, so be sure to verify your requirements with your new service representative. **Your site must be at final grade, and you must stake the location for electric facilities before we begin construction.** Your requirements will be documented in a Standard Procedures letter that you will receive after you submit your plans to us, and before you sign an Electric Line Extension Agreement.

You will install

- secondary conduit [1] and trench with pull string between the transformer and meters
- transformer pad and conduit stub outs
- meter sockets

We will install

- primary cable and trench [5]
- transformer and terminations
- metering
- secondary wires between transformer and meters

The following table references drawings in this book for your facilities.

Type of Installation	Single-Phase	Three-Phase
transformer pad [2] and conduit stub outs [3]	DS-7-16.1	DS-7-16.7
meter sockets	MS-4-1.0	MS-4-2.0 [4]

NOTES:

1 - The conductor and conduct will be a continuous unbroken run without pullboxes.
2 - Transformer pad form, conduit placement, and pad location must be inspected and approved by PNM before concrete is poured.
3 - Two primary conduit stub outs as specified by PNM. Conduits must be buried a minimum of 42 inches, extend a minimum of 5 feet beyond the edge of the equipment pad, and be capped at both ends.
4 - Use this meter socket for 120/208 volt single-phase service from a three-phase transformer.
5 PNM will not provide trench for joint utilities.

Blank Page for Notes

Residential Subdivisions: Electric Service Requirements

The Electric Service Guide in general is for PNM Service Territories (See page ii). Check with your new service representative to determine which steps are appropriate for your situation.

We want to work with you to supply electricity for your subdivision.

This chapter focuses on the requirements for residential developers. We want to provide developers and their contractors with the information they need to plan and receive electric service for their development. We want to work with you and assist you, so that this process works smoothly.

The procedures in this book enable a complex and regulated process to work for the many people involved.

The following procedures and requirements are necessary, because they provide a structure that allows a complex process to be completed in a predictable and efficient manner. We realize that the successful construction of a residential subdivision requires cooperation and scheduling among many entities, which could include contractors, utilities, municipalities, banks and others. Therefore, we provide this document to:

- promote mutual planning and scheduling
- promote fair and consistent treatment for you and your contractors
- ensure compliance with the requirements of the Public Regulation Commission
- coordinate with the requirements of local government inspection and permitting agencies regarding enforcement of the National Electrical Code (NEC), and the National Electrical Safety Code (NESC)
- ensure compliance with all applicable environmental laws

Our process to provide you with electricity is governed by several policies that are approved and monitored by the Public Regulation Commission. The complete text of these policies can be obtained from your new service representative. Most of these policies are included in summary form in the chapter of this document on “Policies”, page 61. In this chapter, we provide you with the important information from these policies that affects the residential subdivision developer.

All our procedures are developed to be in compliance with the PNM Line Extension Policy or PNM-TNMP Line Extension Policy (LXP). This policy is established to ensure that all customers, including those desiring line extensions and existing rate payers, are treated fairly and consistently.

The LXP states that PNM must design the minimum system needed to provide service to the customer. In regard to underground electric systems, the minimum system generally incorporates a looped design. The looped underground design is required to provide customers on this system with an acceptable electric restoration time should a failure occur in the underground cable.

What you need to know about the Line Extension Policy:

- The Line Extension Policy governs the costs of building line extensions.
- You will need a line extension to provide electricity to your development.
- Your cost for a line extension is our estimated cost to design and build electric facilities to serve your development less any credits to which you are entitled.
- Initial credits are based on the policies.
- More information on credits can be read further in this section. (See Policies, page 61)

Steps to Follow to Provide Electric Service to Your Subdivision

The following steps tell you how to obtain electric service for your subdivision. A book of this size cannot cover all situations. Please be sure to work with your new service representative to meet your needs. This book cannot take precedence over contracts that are developed for your project, or the rules and regulations that govern line extensions. In most cases, you have the option to have telephone, cable TV and gas installed in the same trench as the PNM electric facilities. When joint trench utilities are planned for subdivisions, the customer will serve as the focal point for coordination of the project.

You may want to coordinate your need for construction power with your permanent line extension.

1. Plan for Electric Service

Consider the coordination of utility installation with your construction schedule.

Just as you must work with construction plans for the development of your subdivision, we must develop plans for the power lines that will supply electricity to your subdivision. Give consideration to how best to coordinate power line construction with your site development. Standard voltage for residential customers is single-phase 120/240 volt service.

- Where are the power lines and transformers going to be installed?
- Where and when would you like the construction power for your development?
- How will your grading, curb, and road installation affect installation of power facilities?
- How will other utilities affect installation of power facilities?
- Are there electric facilities on site or will there be costs to construct electric lines to your site?
- Will there be utilities going under the roads and can they be installed prior to paving?

Electric line extensions are not free. You need to consider this cost in the financial planning for your subdivision.

Call your new service representative for assistance.

Call your local PNM office (page 9) to request a new service representative to work with you in the planning stages of your project.

2. Submit Your Specifications to Us

We need your plans, so that we can design the electric facilities to serve your subdivision.

Electric service to subdivisions can be very complex with many variables. Don't forget to plan for electric service to such things as street lights, power for sprinkler systems or wells and power to guard houses, as required. Please discuss and coordinate your specifications with us as early as possible and provide us with the following:

- site plan and filed plat in electronic format
- proposed public utility easement as required by the utilities
- existing easements of record on the property under development
- grading plan
- driveway locations (this is essential for zero lot line and town house construction)
- average square footage of future homes
- type of heating and cooling system for future homes
- special electrical requirements
- landscape plan
- plans indicating retaining walls and concrete lined drainage areas
- street light locations as determined by the local authority
- any other specialty plans
- proposed meter locations when possible

Electric meter locations are a sensitive issue during house construction. Please let your home builders know that there are limitations regarding electric meter locations.

What you need to know about transformer and electric meter locations:

- We need to work with you to determine the transformer and meter locations. Ask your new service representative for meter and transformer locations.
- Meters must be easily accessible for reading and maintenance.
- Transformers must be easily accessible by truck for operation and maintenance.
- Refer to drawing MS-7-1.0 for required working clearance around meters.
- Refer to drawing DS-7-16.12 for required working clearance around transformers. Refer to drawing DS-9-17.0 for required working clearance around switchgear.

Make sure your facilities are a safe distance from overhead lines.

The National Electrical Safety Code (NESC) establishes clearances that must be maintained between power lines and buildings, signs, and other structures. **These clearances must be maintained regardless of easement boundaries**. When planning your facilities, please work with us to ensure that these required clearances are maintained.

The pre-design conference is a key coordination opportunity.

A Pre-design Conference will need to be coordinated with your new service representative. The Pre-design Conference is for you, us, other utilities, contractors, and any other concerned party to meet and discuss details of the project. Items that are discussed are not limited, and typically include our proposed electric system design, construction scheduling, utility location, street crossings, customer staking responsibilities, joint use of easements by utilities, barricade requirements for trenches, dust control, and responsibility for opening and closing trenches. Decisions made during this conference will be incorporated into formal construction agreements.

We will estimate the cost of the electrical facilities to serve you.

After we receive your plans and typically after the pre-design conference, new service representative will contact you to discuss upfront costs related to your line extension and to assist you if required in your acquisition of necessary right-of-way to provide power to your development.

We will comply with applicable environmental laws. The responsible protection of natural and cultural resources is a part of the cost of a line extension. This process can be lengthy depending on resources affected and land jurisdiction.

Trenching

See Trenching Policy, page 76.

3. Develop Line Extension Agreement

The Line Extension Agreement is a contract for the cost of your line extension.

You will need to discuss your service options with your new service representative. We will let you know your cost for the permanent line extension that will serve you. You must pay our estimated cost to build the line extension, less any credits for which you are eligible. The two types of credits available are explained in the following section.

Due to differences in the rules and regulations on file with the NMPRC between PNM and PNM-TNMP service territories credit calculations differ. See Policies, page 61 for PNM and PNM-TNMP service territories.

Make sure your facilities are a safe distance from overhead lines.

The National Electrical Safety Code (NESC) establishes clearances that must be maintained between power lines and buildings, signs, and other structures. **These clearances must be maintained regardless of easement boundaries**. When planning your facilities, please work with us to ensure that these required clearances are maintained.

What you need to know about Lot Credits

When a line extension passes other unserved lots, the lot credit compensates the line extension customer for the service benefits to these lots.

There are four types of lot credits available to compensate the customer for benefits provided to other properties by the line extension.

Lot credits apply only to lots properly filed and recorded in the County Clerk's office. The customer will need to provide copies of this document to PNM in order to get this credit.

The lot credits include:

- **$400** for each lot made ready for a service drop from either overhead or underground lines.
- **$50** for each lot passed by the new underground backbone line, which will require padmount transformers and/or pedestals and/or secondary wire to provide future service.
- **$250** for each lot passed by the new overhead backbone line, which will require pole-mounted transformers and/or secondary wire to provide future service.
- **$150** for each lot made ready for a service drop by a new overhead transformer hung on an existing pole. This credit is in lieu of the $400 credit mentioned above.

The total credit given will never exceed PNM's bid or the Customer Built Option Cost, whichever is lower.

What you need to know about Revenue Credits

If the customer believes the revenue from his project will exceed that identified on the revenue credit tables, he may sign a Revenue Credit Guarantee Agreement for meeting the higher revenue figure.

Up-front revenue credits will be determined by PNM.

The minimum residential revenue credit is $600.

In order to be eligible for revenue credits, final building plans must be provided to PNM.

Any lot receiving a revenue credit is not eligible for a lot credit.

Once defined, the revenue credit is firm. No revenue credit reconciliation will be made later.

A signed Revenue Credit Guarantee Agreement (RCGA) may be required for customers wishing to claim revenue amounts exceeding those normally identified in the company's Revenue Estimation Table. The RCGA is in the form of a signed agreement. The RCGA requires the customer to generate actual revenues, which meet or exceed the agreed-upon amount within the first 18 months of permanent electric service, or be billed for the difference. For further information on RCGA see your new service representative.

4. Make Payment for Electric Facilities

Your payment is the signal to schedule and construct the facilities to serve you.

PNM can schedule construction for the electric facilities we design to serve you once we have received applicable payments, agreements and permits. Construction scheduling is a critical stage in the construction of your building. The advance planning outlined in all the previous steps will enable us to meet your needs. At this time, you will probably start construction on your subdivision, and you may need temporary service for construction power.

5. Develop Your Subdivision

You will develop your site into a residential subdivision, ready for home builders to begin their job. We will construct the electrical system that will allow future homes to receive electricity.

To ensure that we meet your schedule, please keep your new service representative informed of the status of your subdivision and any changes that may arise.

This explains what you will do.

All grading operations shall be completed before we can trench. Please also schedule major landscape filling operations to follow line installation. Proper coordination of landscape operations with construction can reduce costs for all involved.

In general, all curb, gutter, main water and main sewer systems must be installed, and the grading must be within 6 inches of final grade before PNM installation can begin. All construction activities must be in compliance with the agreements reached in the pre-design meeting. It is very expensive to relocate facilities after construction. You will pay this expense, if the relocation results from your requested changes or lack of compliance with PNM requirements.

This explains what we will do.

We will build facilities to provide 120/240 volt electric service to each lot within your subdivision. Meters and service connections to each home will be made in the future, after the homes are constructed and ready for occupation.

Blank Page for Notes

Commercial/Industrial Subdivisions: Electric Service Requirements

The Electric Service Guide in general is for PNM Service Territories (See page ii). Check with your new service representative to determine which steps are appropriate for your situation.

We want to work with you to supply electricity for your development.

This chapter focuses on the requirements for commercial/industrial subdivisions. We want to provide developers and their contractors with the information they need to plan and receive electric service for their development. We want to work with you and assist you, so that this process works smoothly.

The procedures in this book enable a complex and regulated process to work for the many people involved.

The following procedures and requirements are necessary, because they provide a structure that allows a complex process to be completed in a predictable and efficient manner. We realize that the successful construction of commercial/industrial subdivision requires cooperation and scheduling among many entities, which could include contractors, utilities, municipalities, banks and others. Therefore, we provide this document to:

- promote mutual planning and scheduling
- promote fair and consistent treatment for you and your contractors
- ensure compliance with the requirements of the Public Regulation Commission
- coordinate with the requirements of local government inspection and permitting agencies regarding enforcement of the National Electrical Code (NEC), and the National Electrical Safety Code (NESC)
- Ensure compliance with all applicable environmental laws

Our process to provide you with electricity is governed by several policies that are approved and monitored by the Public Regulation Commission. The complete text of these policies can be obtained from your new service representative. Most of these policies are included in summary form in the chapter of this document on “Policies”, page 61. In this chapter, we provide you with the important information from these policies that affects the business subdivision developer.

All our procedures are developed to be in compliance with the PNM Line Extension Policy or PNM-TNMP Line Extension Policy (LXP). This policy is established to ensure that all customers, including those desiring line extensions and existing rate payers, are treated fairly and consistently. However, this LXP does not apply to customers with expected loads greater than 500 kW and who will, in the Company's opinion, ultimately take electric service under PNM Rate Schedule 4B (Large Power), 5B (Industrial Power) or 4000B (United States Governmental Special Contract). **In such situations, for these customers line extensions and service agreements will be established on an individual basis.**

The LXP states that PNM must design the minimum system needed to provide service to the customer. In regard to underground electric systems, the minimum system generally incorporates a looped design. The looped underground design is required to provide customers on this system with an acceptable electric restoration time should a failure occur in the underground cable.

What you need to know about the Line Extension Policy:

- The Line Extension Policy governs the costs of building line extensions.
- You will need a line extension to provide electricity to your development.
- Your cost for a line extension is our estimated cost to design and build electric facilities to serve your development less any credits to which you are entitled.
- Initial credits are based on the policies.
- More information on credits can be read further in this section. (See Policies, page 61)

Steps to Follow to Provide Electric Service to Your Commercial/Industrial Subdivision

The following steps tell you how to obtain electric service for your subdivision. A book of this size cannot cover all situations. Please be sure to work with your new service representative to meet your needs. This book cannot take precedence over contracts that are developed for your project or the rules and regulations that govern line extensions. In most cases, you have the option to have telephone, cable TV and gas installed in the same trench as the PNM electric facilities. When joint trench utilities are planned for subdivisions, the customer will serve as the focal point for coordination of the project.

You may want to coordinate your need for construction power with your permanent line extension.

1. Plan for Electric Service

Consider the coordination of utility installation with your construction schedule.

Just as you must work with construction plans for your development, we must develop plans for the power lines that will supply electricity to your site. Give consideration to how best to coordinate power line construction with your construction schedule.

- What type of electric service do you want to offer to your future tenants, single-phase, three-phase, or a combination of both?
- Three-phase commercial/industrial subdivisions designed to provide three-phase underground service are subject to certain restrictions for single-phase customers. Since these systems are designed to be operated as three-phase systems, the installation of single-phase transformers will not be permitted. Developers desiring the availability of single-phase service via single-phase transformers at certain properties may elect to have the system designed and constructed such that a separate cable is installed for single-phase service, in addition to the cables installed for the three-phase service.
- Where are the power lines and transformers going to be installed?
- Where and when would you like the construction power for your development?
- How will your grading, curb, and road installation affect installation of power facilities?
- How will other utilities affect installation of power facilities?

Electric Line Extensions Are Not Free. You need to consider this cost in the financial planning for your subdivision.

Call your new service representative for assistance.

Call your local PNM office (page 9) to request a new service representative to work with you in the planning stages of your project.

2. Submit Your Specifications to Us

We need your specifications, so that we can design the electric facilities to serve your development.

Electric service to a commercial/industrial subdivision can be very complex with many variables. Please discuss and coordinate your specifications with us as early as possible. In order for us to supply your development with electricity, we need to see your specifications, including the information in the following:

- site specification and filed plat in electronic format
- copy of warranty deed
- proposed public utility easement as required by the utilities
- existing easements of record on the property under development
- complete set of construction drawings
- streetlight locations as determined by the local authority
- any other specialty specifications

Electric meter and transformer locations are sensitive issues during construction. Please let your business tenants know that there are limitations regarding electric meter and transformer locations.

What you need to know about electric meter and transformer locations:

- We need to work with businesses to determine the meter and transformer locations. A new service representative should be contacted for meter and transformer locations.
- Meters must be easily accessible for reading and maintenance.
- Transformers must be easily accessible for maintenance and operation.
- Refer to drawings MS-7-1.0, MS-7-2.0, DS-7-16.12 and DS-9-17.0 for required working and safety clearance around meters transformers and switchgear.
- Please pass this information on to your business tenants.

Make sure your facilities are a safe distance from overhead lines.

The National Electrical Safety Code (NESC) establishes clearances that must be maintained between power lines and buildings, signs, and other structures. **These clearances must be maintained regardless of easement boundaries**. When planning your facilities, please work with us to ensure that these required clearances are maintained.

The Pre-design Conference is a key coordination opportunity.

A Pre-design Conference will need to be coordinated with your new service representative. The Pre-design Conference is for you, us, other utilities, contractors, and any other concerned party to meet and discuss details of the project. Items that are discussed are not limited, and typically include our proposed electric system design, construction scheduling, utility location, joint use of easements by utilities, barricade requirements for trenches, dust control, and responsibility for opening and closing trenches. Decisions made during this conference will be incorporated into formal construction agreements.

We will estimate the cost of the electrical facilities to serve you.

After we receive your plans and typically after the pre-design conference, new service representative will contact you to discuss upfront costs related to your line extension and to assist you if required in your acquisition of necessary right-of-way to provide power to your development.

We will comply with applicable environmental laws. The responsible protection of natural and cultural resources is a part of the cost of a line extension. This process can be lengthy depending on resources affected and land jurisdiction.

Trenching

See Trenching Policy, page 76.

3. Develop Line Extension Agreement

The Line Extension Agreement is a contract for the cost of the line extension that will serve your development.

You will need to discuss your service options with your new service representative. We will let you know your cost for the permanent line extension that will serve you. You must pay our estimated cost to build the line extension, less any credits for which you are eligible. The two types of credits available are explained in the following section.

Due to differences in the rules and regulations on file with the NMPRC between PNM and PNM-TNMP service territories credit calculations differ. See Policies, page 61 for PNM and PNM-TNMP service territories.

What you need to know about Lot Credits

When a line extension passes other unserved lots, the lot credit compensates the line extension customer for the service benefits to these lots.

There are four types of lot credits available to compensate the customer for benefits provided to other properties by the line extension:

Lot credits apply only to lots properly filed and recorded in the County Clerk's office. The customer will need to provide copies of this document to PNM in order to get this credit.

The lot credits include:

- **$400** for each lot made ready for a service drop from either overhead or underground lines.
- **$50** for each lot passed by the new underground backbone line, which will require padmount transformers and/or pedestals and/or secondary wire to provide future service.
- **$250** for each lot passed by the new overhead backbone line, which will require pole-mounted transformers and/or secondary wire to provide future service.
- **$150** for each lot made ready for a service drop by a new overhead transformer hung on an existing pole. This credit is in lieu of the $400 credit mentioned above.

The total credit given will never exceed PNM's bid or the Customer Built Option Cost, whichever is lower.

If the customer believes the revenue from his project will exceed that identified on the revenue credit tables, he may sign a Revenue Credit Guarantee Agreement for meeting the higher revenue figure.

What you need to know about Revenue Credits

Up-front revenue credits will be determined by PNM.

In order to be eligible for revenue credits, final building plans must be provided to PNM.

Any lot receiving a revenue credit is not eligible for a lot credit.

Once defined, the revenue credit is firm. No revenue credit reconciliation will be made later.

A signed Revenue Credit Guarantee Agreement (RCGA) may be required for customers wishing to claim revenue amounts exceeding those normally identified in the company's Revenue Estimation Table. The RCGA is in the form of a signed agreement. The RCGA requires the customer to generate actual revenues, which meet or exceed the agreed-upon amount within the first 18 months of permanent electric service, or be billed for the difference. For further information on RCGA see your new service representative

4. Make Payment for Electric Facilities

Your payment is the signal to schedule and construct the facilities to serve you.

PNM can schedule construction for the electric facilities we design to serve you once we have received applicable payments, agreements and permits. Construction scheduling is a critical stage in the construction of your building. The advance planning outlined in all the previous steps will enable us to meet your needs. At this time, you will probably start construction on your development, and you may need temporary service for construction power.

5. Develop Your Commercial/Industrial Subdivision

During this step, you will develop your site into a commercial/industrial subdivision, ready for occupation by businesses. We will construct the electrical system that will allow future businesses to receive electricity.

This explains what you will do.

All grading operations shall be completed before we can trench. Please also schedule major landscape filling operations to follow line installation. Proper coordination of landscape operations with construction can reduce costs for all involved.

In general, all curb, gutter, main water and main sewer systems must be installed, and the grading must be within 6 inches of final grade before electric line installation can begin. All construction activities must be in compliance with the agreements reached in the pre-design meeting. It is very expensive to relocate facilities after construction. You must pay for this expense, if the relocation results from your requested changes or lack of compliance with PNM requirements.

This explains what we will do.

We will build facilities to provide electric service per your request to each lot within your development. Meters, transformers (if required), service connections for each business will be made in the future as described in the Single Businesses section, page 21.

Policies

This section summarizes some of the major policies that govern how we conduct business.

These policies are:

- Line Clearances from Buildings, Signs, and Other Structures,
- Access to PNM Equipment,
- Customer Generation Systems,

PNM Service Territories:

- Electric Line Extension Policy,
- Metering Policy,
- Trenching Policy,

PNM – TNMP Service Territories:

- Electric Line Extension Policy,
- Metering Policy,
- Trenching Policy,

All of these policies were developed with the goal of providing fair and consistent treatment to all our customers, including those needing line extensions and existing rate payers.

LINE CLEARANCES FROM BUILDINGS, SIGNS, AND OTHER STRUCTURES

PNM installs, operates and maintains its overhead and underground lines in compliance with the National Electrical Safety Code (NESC). NESC clearance requirements or land use may change over time which can result in additional clearance needed for new construction. **Clearance requirements must be met whether or not your building or sign is in PNM's easement.** Clearances must be considered in the project planning stage to avoid additional cost. Please call us for assistance with clearances shown in DS-13-2.0 through DS-13-8.5. There may be a charge for any line work we must do to ensure compliance with the NESC.

ACCESS TO PNM EQUIPMENT

PNM considers safety while working on the PNM system to be paramount. It is recognized that entry into PNM equipment, such as padmounted transformers and switchgear by third-party contractors may be necessary from time to time. Access into this equipment will be strictly controlled by PNM and shall be opened by authorized PNM personnel only.

A qualified contractor must make arrangements to gain access into PNM equipment for the purpose of installing conduit or pulling secondary cable. Whenever possible, the equipment will be de-energized prior to access. If the equipment cannot be de-energized, the contractor must make arrangements for an authorized PNM employee to be present as long as the equipment is open.

Any unauthorized access into PNM equipment will be considered trespass and will be prosecuted to the fullest extent of the law.

Please contact your local PNM office to gain permission to access PNM equipment.

CUSTOMER GENERATION SYSTEMS

(Customer generation systems include synchronous machines, induction machines, power inverters, turbines, fuel cells, and photovoltaics.)

When a customer intends to install a generator, either for independent operation (Backup or Emergency) or for interconnected operation, they must make this known to their new service representative. PNM will review the final electrical drawings of all customer generation plans. The system shall be designed such that either (1) parallel operation of the generator with the utility system cannot occur or (2) the customer's generator and interconnection facilities comply with PNM's Interconnection and Safety Standards and requirements for interconnected parallel operation. The customer should contact Delivery Department as soon as possible for specific guidance.

For generation systems that are intended for independent operation, a break-before-make type of transfer switch is required. PNM Engineering will review the design and will inspect the installation for proper connection and break-before-make operation. After the installation has been approved by PNM Engineering, no modifications to the transfer switch connections will be permitted without PNM's approval.

Customers installing generators for the purpose of parallel operation will be required to comply with PNM's Interconnection and Safety Standards and Interconnection Requirements, as well as all applicable NMPRC Rules and local, state and federal codes and requirements. The customer will be required to complete a separate written application for the operation of a generator in parallel with the PNM system. In addition, the customer will be required to enter into an Interconnection Agreement with PNM. Interconnection Applications and additional information on parallel operation of generators can be obtained by writing to:

Public Service Company of New Mexico
RENEWABLE ENERGY
414 Silver Ave. SW - MS-1135
Albuquerque, NM 87102

505-241-2491

The following apply to PNM Service Territories ONLY
(See page ii)

PREFACE TO ELECTRIC LINE EXTENSION POLICY

Line extensions are not free. The Electric Line Extension Policy defines the costs that customers must pay for a line extension.

We are in the business of selling electricity. Therefore, we build, operate, and maintain an electric distribution system to sell electricity to our customers. We will extend our transmission and distribution facilities, within our jurisdictional boundaries, whenever and wherever requested. The maintenance of this system requires us to make investments in line extensions to serve particular customers; however, differences in line extension features such as length, lot size, subdivision design, or construction features such as geology and geography cause the cost of connecting customers to vary widely. On behalf of ourselves and our customers, we will not make uneconomical investments for connecting customers.

The line extension procedures define the process of calculating any required Construction Cost. Payment of this Construction Cost will be required prior to connecting to our electrical system. This policy applies to line extensions for service to new facilities and to the upgrade or modification of electrical systems to provide for increases in customer load requirements. The customer is required to enter into a line extension agreement with the Company defining the general terms and conditions of the extension facilities and procedures.

PNM can schedule construction for the electric facilities we design to serve you once we have received applicable payments, agreements and permits. Construction scheduling is a critical stage in the construction of your home. The advance planning outlined in all the previous steps will enable us to meet your needs. At this time, you will probably start construction on your building and you may need temporary service for construction power. Costs incurred in constructing the extension, plus costs of upgrading existing facilities as necessary to provide the required electric service, will be included in the line extension cost. In addition, a separate, non-refundable payment may be required to provide for the concurrent installation of any street lighting in areas requiring them.

Customer requested line relocations are not line extensions, and the costs of line relocations are not a part of line extension costs. All line relocation costs must be paid by the requester.

All extensions will normally be constructed on private rights-of-ways. Within incorporated municipalities where private rights-of-way are not readily available, such lines may be constructed on existing public roads, streets, alleys, or easements. Customers shall furnish such rights-of-way as are required, without charge, over property owned or leased by the customer or over third party land, and will, as required, assist in securing other rights-of-way necessary for the extension.

Procedures for Customer-Built Electric Line Extensions

Customers desiring new line extensions may have them constructed by a competent and qualified electrical contractor. For complete requirements, see PNM and PNM-TNMP Rule 15: Electric Line Extension Policies, which follows this section.

After construction and acceptance, such systems will be sold to PNM by the Customer for PNM's use in serving end users.

If the Customer is interested in pursuing this option, customer must discuss with new service representative.

- Such systems must be designed by PNM.
- Materials used must be from PNM approved manufacturers in compliance with current PNM material specifications, as verified by a PNM inspector. Customers must obtain from the transformer supplier a PNM Certificate of Approval for distribution transformers being installed in PNM distribution systems. The transformer Certificate of Approval must be submitted to PNM prior to the transformer's field installation.
- All meters and associated metering transformers will be provided and installed by PNM.
- Customer's contractor must be properly qualified, licensed, properly insured, and employ qualified craftsmen.
- Construction practices and equipment must be in compliance with PNM construction standards as verified by a PNM inspector.
- Customer must provide easements for electrical facilities in accordance with PNM's design and easement format.
- Customer must pay PNM's design and inspection costs at the time of the sale of the system to PNM.
- If PNM determines the extension was built in accordance with PNM's design, material, and construction standards, with proper easements assignable to PNM, and is free of all liens, then PNM agrees to buy the system for $1.00. The Customer is liable for the direct and indirect consequences of any defects or failures of the electrical system for one year after the date of sale.
- Customer is fully and solely responsible for assuring the Line Extension is installed within the appropriate easements, public utility easements, and/or road right-of-way and providing the Company with written certification to that effect.
- The customer and PNM will sign an Electric Line Extension Sales Agreement (Customer-Built System) contract at closing. After purchase, PNM will energize and operate the electrical system.

Contact your new service representative for more information on Customer-Built Systems.

RULE 15: ELECTRIC LINE EXTENSION POLICY (EFFECTIVE 08-11-99)

Introduction

This Electric Line Extension Policy (LXP) outlines the procedures for installing field equipment necessary to provide new electric service to Public Service Company of New Mexico (PNM) residential and small commercial customers.

When connecting customers the Company, on behalf of its other customers and itself, will not make an investment in transmission and distribution equipment that is excessive or uneconomical.

This LXP does not apply to customers who will, in the Company's opinion, ultimately take electric service under PNM Rate Schedule 4B, (Large Power), 5B (Industrial Power) or 4000B (United States Governmental Special Contract). In such situations, for these customers line extensions and service agreements will be established on an individual basis.

Definitions

Line extension - A line extension consists of the installation of all field equipment necessary to provide for new electric service. Physical components of line extensions may include, but are not limited to, all primary wires, secondary wires, service wires, transformers, meters, equipment supporting structures, trenches, switchgear, and duct bank systems. Line extension costs include all labor, materials, vehicles, and overheads required to design and construct the line extension, and to acquire easements, permits, and right-of-way necessary for its construction. Line extension costs also include the costs of changing existing facilities to provide the new electric service. Line relocations are not line extensions and shall be paid for by the customer.

Minimum Line Extension - The Minimum Line Extension is the line extension that would be designed solely to meet the needs of the customer requesting service, and is consistent with Company and industry design and safety standards. Sound engineering and economic considerations may require systems to be designed and built which exceed the needs of the Customer requesting service. The Company shall bear the portion of the costs of electrical system work done for the sake of area-wide system improvement. "Area-wide system improvement" shall be construed to mean any system capacity beyond what is specifically required for the particular customer in question.

Cost Responsibility: PNM Built

The LXP customer shall be responsible for the costs associated with the Minimum Line Extension. The amount paid by the LXP customer will be the difference between PNM's Minimum Line Extension bid ("Bid") and an initial line extension credit, as determined by PNM. This amount must be paid, in full and in advance of any construction, by the LXP customer. The LXP customer will be required to execute an Electric Line Extension Agreement (PNM Built), if the Bid exceeds the initial line extension credit.

PNM will review, on a regular basis, its procedures and assumptions for calculating the Bid to ensure that the Bid is as close as reasonable to the actual cost incurred by PNM. The amount paid by the LXP customer is non-refundable once construction activities have commenced.

Cost Responsibility: Customer Built Option

The LXP customer may elect to have the line extension constructed by a qualified contractor, in lieu of PNM crews. In accordance with the requirements contained in the Customer Built System Requirements attached hereto as Appendix 1, PNM shall provide the engineering design, construction inspection and easement assurance at the LXP customer's expense. Thus, the LXP Customer will pay the actual cost of PNM's activities, in addition to the contractor's price ("Customer Built Option Cost"). Upon satisfactory completion of the project construction, PNM will assume ownership and responsibility for the new line extension, and the LXP customer will receive a line extension credit determined by PNM. The LXP customer will be required to execute an Electric Line Extension Construction Agreement (Customer Built) and Electric Line Extension Sales Agreement.

Line Extension Credit

All LXP customers are eligible to receive line extension credit. Line extension credits are established to give consideration to the current and possible future electric customers served by the line extension. The credit will be employed to reduce the amount of the line extension cost actually paid by the LXP customer. The total credit given will not ever exceed PNM's Bid or the Customer Built Option Cost, whichever is lower.

The line extension credit may include consideration for a revenue credit and, if applicable, a credit for a platted lot:

Revenue Credit:

The revenue credit relates to the customer's estimated annual electric usage and will be determined from the customer's final building design drawings. Customer site construction must be underway to qualify for this credit. The credit is determined from a table as set forth in the Company's Revenue Estimation Tables. There are separate tables for residential customers and for small commercial customers and these tables may be updated periodically. In situations where no standard revenue tables exist, revenue credits will be determined by the Company.

LXP customers are required to generate annual revenues from the new line extension that meet or exceed the revenue credit granted.

In situations where it is difficult to predict the future usage, the LXP customer will be required to execute an Electric Line Extension Revenue Credit Guarantee Agreement ("Revenue Agreement"). Revenue Agreements will be required from residential customers claiming loads that exceed the Residential Revenue Estimation Tables and from all non-franchised commercial LXP customers. Commercial franchise LXP customers will not be required to execute a Revenue Agreement because their estimated usage can be accurately determined by checking the billing history of other members of the franchise. A franchise is a commercial operation engaged in the business of the sale of inventory according to the methods and procedures prescribed by the supplier of inventory

Lot Credit

If the line extension can serve more than one lot not presently receiving service, lot credit will be determined by the number of lots platted, filed and recorded with the County Clerk as defined in the table below. Lots eligible for a revenue credit will not be eligible for a lot credit.

In situations where it is difficult to predict when lots passed by the new line extension will be developed and require new service connections, the total credits received by the LXP customer may not exceed 66% of PNM's Bid. This would be applicable to lots that have been platted, filed and recorded for ten years or more without 10% of the total platted area developed.

LOT CREDIT	LOT STATUS
$400/Lot	For each additional lot ready for a service connection from a new line extension.
$50/Lot	For each additional lot passed by the new underground line extension, requiring a future transformer or pedestal, for a service connection.
$250/Lot	For each additional lot passed by the new overhead line extension requiring a future transformer or secondary line for a service connection.
$150/Lot	For each additional lot made ready for a service connection by the installation of an overhead transformer on an existing pole.

Commencement of Residential Service Construction

In accordance with NMPUC Rule No. 410, within 30 days after a residential customer has complied with all the reasonable utility requirements, the Company shall provide to such customer a written estimate of the cost of the line extension. The Company shall complete construction of the line extension within 60 days after the residential customer signs the Company's line extension agreement, pays the required payment, and after the utility has secured all applicable permits, rights-of-way, materials and labor necessary for the line extension.

Commencement of Commercial Service Connection

Construction of extensions for overhead and underground commercial service will commence within a reasonable time in accordance with the Company's construction schedule and after any required payment by the Customer for construction of the line extension is made.

RULE 15 APPENDIX 1: CUSTOMER BUILT SYSTEM REQUIREMENTS (08-11-99)

Customers desiring new electric service lines and systems to be built to their premises may have them constructed by a competent and qualified electrical contractor. After construction and acceptance, such systems shall be sold to the Company for $1.00 by the Customer. PNM then assumes ownership and maintenance responsibility of the system.

In recognition of the need to protect the public from electrical hazards, and the need for electrical systems which are useful and safely maintainable over a normal and customary service life, the following will govern the construction of customer-built electrical systems.

Design and Construction Specifications

The Company will design the Minimum Line Extension required to serve the Customer, in accordance with the Company's standards and specifications. The Customer shall execute an Electric Line Extension Construction Agreement (Customer Built).

The Company will provide electrical system design drawings and associated bills of material to the Customer. The Customer shall pay the Company for applicable design costs.

Material Specifications

The Company will specify all materials and equipment to be used in the electrical system including, but not limited to: wire, cable, conduit, transformers, poles, fixtures, switchgear, relays, capacitors, and insulators. The Customer shall be free to acquire said materials from any source, provided that all materials shall be from approved manufacturers and meet the specifications as promulgated by the Company that are in effect at the time the Company provides the Design and Construction Specifications to the Customer.

Quality Control and Assurance

The Customer shall comply with Company specifications for materials, equipment, trenching, and construction standards. In order to assure compliance, the Company will select a Construction Inspector who will visit the construction site. The Inspector shall have the authority to accept, or reject, the work and materials of the Customer or contractor and shall certify such acceptance or rejection at the time of inspection. The sole function of the Inspector shall be to verify compliance with design, materials, equipment and installation specifications only. Customer shall be responsible for coordinating required inspections.

The Customer shall pay the Company for its reasonable costs incurred in the inspection of the electrical system.

The Company has no obligation to purchase an electrical system which is not accepted by the Company's Construction Inspector. In addition, the Company will not provide electric service to a system which is not accepted by the Company's Construction Inspector.

Easements and Rights-Of-Way

The Customer shall provide to the Company easements and right-of-way in a Company-approved format which reflect the "as-built" configuration and location of the electric system.

The Company will assist the Customer in securing right-of-way necessary for the extension, if requested. The Customer shall pay the Company for such assistance.

The Customer shall pay the Company for its reasonable costs incurred to verify the easements and right-of-way.

Licensing Requirements and Compliance With Required Governmental Inspections

The Customer will hire only those contractors who are properly and currently qualified and licensed, in accordance with State and local law and regulation, to construct electrical distribution systems, including, but not limited to, EL-1 and EE98 certification.

Also, the Customer will comply with all applicable State and local construction inspection requirements.

PNM reserves the right to disapprove of any contractor selected by the Customer on the grounds that the contractor is not properly qualified or otherwise able to construct the line extension in accordance with the Company's construction standards.

Meters

The purchase and installation of meters will be the sole responsibility of the Company. The Customer shall pay the Company its reasonable cost incurred to purchase and install meters.

Purchase of System

After the electrical system has been constructed, and accepted by the Company's Construction Inspector, the Customer shall sell to the Company and the Company will buy the line extension for $1.00. The Company and the Customer shall execute an Electric Line Extension Sales Agreement (Customer-Built) to transfer the property. This sale shall be free of any liens or encumbrances and the customer shall provide a properly executed release and/or waiver of lien from any contractor employed in this project. The Customer may also be required to execute an Electric Line Extension Revenue Credit Guarantee Agreement.

The Customer shall supply to the Company its certified cost incurred in constructing the electric system so that proper accounting of the electric system may be made by the Company.

Liability for the Electrical System

Commencing with the date of sale of the electrical system to the Company, the Company will assume full and complete operating responsibility for the system. The Customer shall be liable for the direct and indirect consequences of any defects or failures of the electrical system constructed by the Customer for a period of one year, unless such defects or failures arise from the Company's design, specifications, or improper operation of the system.

METERING POLICY

Meter Equipment Security, Ownership, and Approval

The electric meter is PNM's electric system interface with our customer. We work very hard to insure that the meter is extremely accurate, and the sensitive data gathered from that meter are secure at all times. Because of this, all electric billing meters and instrument transformers must be installed, owned, and maintained by PNM. **To preserve the security of the metering equipment and data, we reserve the right to seal all meter entrance switches and all service entrance boxes, regardless of ownership.**

All meter sockets installed for residential and commercial use shall be PNM-approved outdoor type sockets. While these sockets are customer-purchased and owned, we must approve them to assure compatibility with our electric system, their ability to withstand available fault current duty and the wear and tear of meter installation/removal. Meter sockets for mobile homes will be mounted on PNM-approved pedestals or poles. The service entrance conductors for all overhead services will be within a continuous unbroken conduit run from the point of attachment to the meter socket.

Meter rings, where used, are to be furnished by the customer. Rings on meters must be of good quality and must work adequately on the meter. Approved designs are shown in this publication on drawing number MS-2-1.0.

Meter Locations and Labeling

It is the responsibility of the customer or the customer's contractor or agent to obtain approval of the proposed electric meter location prior to any electrical construction to the customer's facility. This is accomplished by the customer or the customer's representative contacting a PNM new service representative and requesting meter location assistance. Normally, there will be little delay or inconvenience to the customer, however, we may require up to five working days to notify the customer of the approved electric meter location.

All meter installations require at least 30 inches of total side-to-side and 36 inches front working clearances clear of obstructions per drawing number MS-7-1.0. Additional clearance may be needed for special cases. The sockets must be installed such that the meter height (centerline) is 5 feet 6 inches above grade (plus or minus six inches) or per the specific standards drawing(s) for the installation. Grade is defined as the final ground/concrete, or platform level above which the meter is installed and from which it is read.

For grouped metering, the customer is responsible to provide building numbers permanently marked on the proper metal panels, as shown in drawing number MS-4-2.0.

Meter Location Criteria

We want to work with our customers to assure an attractive and functional project, while insuring safe and easy accessibility to our metering equipment. For this reason, we reserve the right to assign and approve the final physical location of the electric meter on all dwellings, buildings, premises, or structures for use by residential, commercial, and industrial customers. Electric meters will be located on either the front or sides of residences (see Construction Standards Drawings for specific construction standards and metering drawings). When located on the sides of residences, electric meters shall be within ten feet of the street side of the residence, but not behind sidewalls, stem walls, or other similar encumbrances. Decorative enclosures used to obscure or camouflage the electric meter shall not obstruct access for reading, safe removal, or installation of the meter. Such enclosures require specific approval in advance by our Meter Department.

If any plaster, abutments, or enclosures that interfere with the setting, maintaining, or reading of the meter are installed after the socket is in place, the customer, at the customer's expense, shall take such measures as are required to correct the situation.

The customer or electrical contractor should consult us for guidance in determining the proper location, elevation, and point of attachment for overhead services.

Should you, the customer, disagree with our assigned electric meter location, please contact us to resolve the matter prior to electrical construction which will result in an alternate location. We reserve the right to deny electrical service to any unauthorized electric meter location that is inconsistent with the location criteria. We will attempt to arrive at a mutually agreeable solution to any location dispute after receiving notice of such dispute from the customer or the customer's representative.

Please note that as long as there is electric service, we require and have a legal right to access the meter.

TRENCHING POLICY

Trenching for Electric Facilities Only:
In those areas where we determine that standard trenching equipment cannot economically or practically excavate for an underground distribution system, the customer will either provide the necessary trenches for the entire distribution system or will pay PNM a non-refundable fee for all trenching costs incurred which exceeds the current cost of excavating by standard trenching equipment. When the customer provides the trench, the customer does not have to pay our estimated cost to excavate with standard trenching equipment.

Trenching for Electric Facilities with Other Utilities:
PNM may choose to provide joint trenching and coordination for extensions to a single lot. For developments of two lots or greater, the customer will provide the trench. This will include trenching within the development and trenching leading up to the development. When the customer provides trenching for other utilities, i.e., gas, phone and/or cable, in a joint trench with PNM electric, the customer will be responsible for providing the necessary trenches and coordination with all utilities for the entire distribution system.

When the customer provides the joint trench, PNM will coordinate with the excavator for the timely installation of its electric facilities. PNM will also share its route with other utilities to facilitate their designs for the joint trench route. The following stipulations and guidelines apply when such a common trench is utilized:

- The installation shall be subject to conditions presented in this Guide.
- The installation shall be made in accordance with the provisions of all applicable codes including the National Electrical Safety Code.
- When a joint-use trench will include natural gas piping the excavator must meet the criteria established by the local gas distribution company. See your local gas representative for details.

When the Customer provides the trenching, the Customer may receive a trench credit against PNM's electric installation estimate(s) equal to the cost of the minimum trench required for the PNM facilities.

Customer provided trenching shall comply with OSHA and all applicable codes and local jurisdictional authority requirements. Refer to DS-10-8.0 pages 2-10 for trenching details. The Customer is responsible for all open trenches and must maintain the trenches for the entire duration that they are open. The Customer is also fully and solely responsible for guaranteeing and assuring that the trench is located within either: 1) dedicated easements to PNM, 2) dedicated public utility easements, or 3) dedicated road rights-of-way. Customer shall provide PNM with a survey verifying and certifying the location of the trench within such dedicated easements and/or road rights-of-way. Said survey shall be duly stamped and sealed by a licensed New Mexico surveyor. PNM will not energize facilities until the customer has provided PNM with said survey.

The following apply to PNM – TNMP Service Territories ONLY
(See page ii)

Electric Line Extension Policy

This Electric Line Extension Policy (LXP) outlines the procedures for installing field equipment necessary to provide new electric service to Public Service Company of New Mexico (PNM) residential and small commercial customers.

When connecting customers the Company, on behalf of its other customers and itself, will not make an investment in transmission and distribution equipment that is excessive or uneconomical.

This LXP does not apply to customers who will, in the Company's opinion, ultimately take electric service under PNM Rate Schedule 3, (Large General Service), or 9 (Industrial Power Service). In such situations, for these customers line extensions and service agreements will be established on an individual basis.

Actual cost for PNM employees' time may be charged for the preparation of a formal, binding cost estimate for line extension construction or maintenance or related work to be performed at the customer's request, over and beyond the non-binding budgetary estimate routinely given at no cost. Each formal estimate is binding upon PNM for thirty (30) days. If the customer accepts the formal cost estimate and agrees to have PNM perform the work described in the work order estimate, the total cost of the estimate will be applied to reduce the customer's contribution to perform the job related work.

Definitions

Advance for Construction (AFC) – A refundable payment by a Customer to the Company that may be required for a line extension when the Project Investment is greater than the credit allowed to the customer.

Contribution in Aid of Construction (CIAC) – A non-refundable payment by a Customer to the Company that may be required for a line extension when the Project Investment is greater than the credit allowed to the customer.

Line extension – A line extension consists of the installation of all field equipment necessary to provide for new electric service. Physical components of line extensions may include, but are not limited to, all primary wires, secondary wires, service wires, transformers, meters, equipment supporting structures, trenches, switchgear, and duct bank systems. Line extension costs include all labor, materials, vehicles, and overheads required to design and construct the line extension, and to acquire easements, permits, and rights-of-way necessary for its construction. Line extension costs also include the costs of changing existing facilities to provide the new electric service. Line relocations are not line extensions and shall be paid by the customer.

Line Extension Credit – The credit relates to the customer's estimated annual electric usage and will be determined by estimated kWh and kW load as determined by the Company. Customer site construction must be underway to qualify for this credit. The credit is determined by comparing the customer's project with similar projects that have consumption history available. This is calculated as the maximum investment for which the estimated profit from the revenue resulting from the line extension equals the Company's cost of capital for that investment.

Minimum Line Extension – The Minimum Line Extension is the line extension that would be designed solely to meet the needs of the customer requesting service, and is consistent with Company and industry design and safety standards. Sound engineering and economic consideration may require systems to be designed and built which exceed the needs of the Customer requesting service. The Company shall bear the portion of the costs of electrical system work done for the sake of the area-wide system improvement. "Area-wide system improvement" shall be construed to mean any system capacity beyond what is specifically required for the particular customer in question.

Project Investment – The total cost to the Company for a line extension.

Cost Responsibility: PNM Built

The LXP customer shall be responsible for the costs associated with the Minimum Line Extension. The amount paid by the LXP customer will be the difference between PNM's Minimum Line Extension bid ("Bid") and an initial line extension credit, as determined by PNM. This amount must be paid in full and in advance of any construction, by the LXP customer. The LXP customer will be required to execute an Electric Line Extension Agreement (PNM Built), if the Bid exceeds the initial line extension credit.

PNM will review, on a regular basis, its procedures and assumptions for calculating the Bid to ensure that the Bid is as close as reasonable to the actual cost incurred by PNM. Except for AFC, the amount paid by the LXP customer is non-refundable once construction activities have commenced.

Cost Responsibility: Customer Built Option

The LXP customer may elect to have the line extension construction by a qualified contractor, in lieu of PNM crews. In accordance with the requirements contained in the Customer Built System Requirements attached hereto as Appendix 1, PNM shall provide the engineering design, construction inspection and easement assurance at the LXP customer's expense. Thus, the LXP Customer will pay the actual cost of PNM's activities, in addition to the contractor's price ("Customer Built Option Cost"). Upon satisfactory completion of the project construction, PNM will assume ownership and responsibility for the new line extension, and the LXP customer will receive a line extension credit determined by PNM. The LXP customer will be required to execute an Electric Line Extension Construction Agreement (Customer Built) and Electric Line Extension Sales Agreement.

When a Customer requests new electrical service, this service is usually provided at no cost to the applicant or applicants if the Project Investment does not exceed the credit.

Line Extensions for Residential and Small Commercial Customers

A. When the Project Investment does exceed the credit, the Company shall require a CIAC to assure that the Company's existing customers are not unfairly burdened by the project investment.

1. In cases where the CIAC is required, payment must be received prior to construction.

2. The amount of the CIAC will be calculated as follows:

Project Investment	$_____
Less Line Extension Credit	
Up to $1,500 for each non-demand metered Customer and up to $15,000 for each demand Metered customer (over 5kW).	$_____
CIAC	$_____

B. Line extensions offering pro-rata sharing for residential customers.

When the Project Investment (exclusive of transformers, meters, and services) less Line Extension Credit for the line extension is more than $7,000, Pro-Rata Sharing may be offered. The AFC will be calculated in the same manner as the CIAC in A.2. Prior to construction, the customer will pay the AFC. The following provisions will apply.

1. If, within sixty (60) months any additional new customer is served from the line extension, the additional new customer will be charged a pro-rata share of the original AFC as if the additional new customer had been a part y to the original line extension. The amount charged to the additional new customer will be refunded to the original party.

2. The Pro-Rata Sharing will terminate if the original customer's AFC (exclusive of transformers, meters, and services) has been reduced by refunds to less that $7,000.

Commencement of Residential Service Construction

In accordance with NMPRC Rule No. 410, within 30 days after a residential customer has complied with all the reasonable utility requirements, the Company shall provide to such customer a written estimate of the cost of the line extension. The Company shall complete construction of the line extension within 60 days after the residential customer signs the Company's line extension agreement, pays the required payment, and after the utility has secured all applicable permits, rights-of-way, materials and labor necessary for the line extension.

Line Extensions Concerning Subdivisions, Condominiums and Apartment Projects, Specific Mobile Home Parks, Industrial and Other Major Loads

A. An agreement for Advance for Construction may be required setting forth the conditions of the extension. Such an agreement provides for full payment of the project investment by the customer prior to construction as AFC to insure that the Company's existing customers are not unfairly burdened by the project investment. The agreement term will be for a period of thirty-six (36) months. It is the Customer's responsibility to notify the Company of the number of Customers/meters added to the agreed upon AFC contract. The agreement will state the maximum obligation, which will be equal to the project investment. If the customer is disconnected on or before the end of the agreement term, no refund will be due.

Upon the Customer notification of the end of the agreement term, the amount refunded to the Customer (if any) will be calculated according to the formula below:

Actual Line Extension Credit Up to $1,500 for each non-demand metered customer And $15,000 for each demand metered customer (over 5kW).	$_____
Less Project Investment of the additional construction (if any) related to the actual credit above.	$_____
Equals the amount due to the customer	$_____

B. The Commercial customer may elect to pay a CIAC in lieu of entering into an agreement Payment must be received by the Company prior to ordering any construction materials. The amount of CIAC will be calculated as follows:

Project Investment	$_____
Less Line Extension Credit Up to $1,500 for each non-demand metered Customer and $15,000 for each demand metered Customer (over 5kW).	$_____
CIAC	$_____

Commencement of Commercial Service Construction

Construction of extensions for overhead and underground commercial service will commence within a reasonable time in accordance with the Company's construction schedule and after any required payment by the Customer for construction of the line extension is made, and after the utility has secured all applicable permits, rights-of-way, materials and labor necessary for the line extension.

Customer Built System Requirement

Customers desiring new electric service lines and systems to be built to their premises may have them constructed by a competent and qualified electrical contractor. After construction and acceptance, such systems shall be sold to the Company for $1.00 by the Customer. PNM then assumes ownership and maintenance responsibility of the system.

In recognition of the need to protect the public from electrical hazards, and the need for electrical systems, which are useful and safely maintainable, over a normal, and customary service life, the following will govern the construction of customer-built electrical systems.

Design and Construction Specifications

The Company will design the Minimum Line Extension required to serve the Customer, in accordance with the Company's standards and specifications. The Customer shall execute an Electric Line Extension Construction Agreement (Customer Built).

The Company will provide electrical system design drawings and associated bills of material to the Customer. The Customer shall pay the Company for applicable design costs.

Material Specifications

The Company will specify all materials and equipment to be used in the electrical system including, but not limited to: wire, cable, conduit, transformers, poles, fixtures, switchgear, relays, capacitors, and insulators. The Customer shall be free to acquire said materials from any source, provided that all materials shall be from approved manufacturers and meet the specifications as promulgated by the Company that are in effect at the time the Company provides the Design and Construction Specifications to the Customer.

Quality Control and Assurance

The Customer shall comply with Company specifications for materials, equipment, trenching and construction standards. In order to assure compliance, the Company will select a Construction Inspector who will visit the construction site. The Inspector shall have the authority to accept, or reject, the work and materials of the Customer or contractor and shall certify such acceptance or rejection at the time of inspection. The sole function of the Inspector shall be to verify compliance with design, materials, equipment and installation specifications only. Customer shall be responsible for coordinating required inspections.

The Customer shall pay the Company for its reasonable costs incurred in the inspection of the electrical system.

The Company has no obligation to purchase an electrical system, which is not accepted by the Company's Construction Inspector. In addition, the Company will not provide electric service to a system, which is not accepted by the Company's Construction Inspector.

Easements and Rights-of-Way

The Customer shall provide to the Company easements and right-of-way in a Company-approved format, which reflect the "as-built" configuration and location of the electric system.

The Company will assist the Customer in securing right-of-way necessary for the extension, if requested. The Customer shall pay the Company for such assistance.

The Customer shall pay the Company for its reasonable costs incurred to verify the easements and right-of-way.

Licensing Requirements and Compliance with Required Governmental Inspections

The Customer will hire only those contractors who are properly and currently qualified and licensed, in accordance with State and local law and regulation, to construct electrical distribution systems, including, but not limited to, EL-1 and EE98 certification.

Also, the Customer will comply with all applicable State and local construction inspection requirements.

PNM reserves the right to disapprove of any contractor selected by the Customer on the grounds that the contractor is not properly qualified or otherwise able to construct the line extension in accordance with the Company's construction standards.

Meters

The purchase and installation of meters will be the sole responsibility of the Company. The Customer shall pay the Company its reasonable cost incurred to purchase and install meters.

Purchase of System

After the electrical system has been constructed, and accepted by the Company's Construction Inspector, the Customer shall sell to the Company and the Company will buy the line extension for $1.00. The Company and the Customer shall execute an Electric Line Extension Sales Agreement (Customer-Built) to transfer the property. This sale shall be free of any liens or encumbrances and the Customer shall provide a property executed release and/or waiver of lien from any contractor employed in this project. The Customer may also be required to execute an Electric Line Extension Revenue Credit Guarantee Agreement.

The Customer shall supply to the company its certified cost incurred in constructing the electric system so that proper accounting of the electric system may be made by the Company.

Liability for the Electric System

Commencing with the date of sale of the electrical system to the Company, the Company will assume full and complete operating responsibilities for the system. The Customer shall be liable for the direct and indirect consequences of any defects or failures of the electrical system constructed by the Customer for a period of one year, unless such defects or failures arise from the Company's design, specifications, or improper operation of the system.

Metering Policy

A. All meters and related metering equipment shall be installed, owned and maintained by the Company. For new load or line extensions, meter costs will be paid by the Customer in accordance with the current Line Extension Policy. The Customer must pay 100% of all meter costs resulting from customer-caused meter relocations.

B. In the event a structure is built so that the meter location in inaccessible, or the meter becomes inaccessible to Company meter readers due to locked gates, the customer's pets, or for any other reason controllable by the customer and not by the Company, the meter socket and/or service conduit or cable shall be moved to an accessible location at the expense of the Customer. In the alternative, the Company shall have the option of installing a remote meter reading device and billing the customer the actual installed cost of the device.

C. The Company reserves the right to seal all meter entrance switches and all service entrance boxes regardless of ownership where the operation or tampering with such equipment may affect the registration of the meter or use of energy contrary to the provisions of these Rules and Regulations or the provisions of the applicable rate schedule.

D. All meters installed for residential use shall be of the outdoor type, which shall be mounted in a position readily accessible for convenient reading.

E. All meter sockets shall be of the outdoor type, which shall be mounted at the height of five to six feet from the finished grade or standing position from which the meter is to be read. In the case of overhead services, there shall be an unbroken conduit complete with wire or an approved cable run from the service entrance to the meter socket. The Customer shall furnish and install the meter socket and any necessary wiring from the service entrance to the meter socket per PNM requirements. The meter socket shall be so located that it is entirely on the outside of the building and within ten (10) feet from the front of residential buildings. In the event a porch or other structure is built so that the meter location in inaccessible, the meter socket and/or service conduit shall be moved to an accessible location at the expense of the Customer. Whenever the construction of a building on an adjacent lot prevents proper access to any meter or the point of attachment of service conductor, the Customer shall move the meter socket and/or the service entrance conductor to a location, which will be accessible to the Company's employee.

F. The meter socket shall be so placed that the meter can be set and the sealing ring installed easily. Should any plaster or abutments be installed after the socket is in place that would interfere with the setting of the meter and the sealing ring. Customer shall move the socket.

G. Where more than one meter is required for a building, such as an apartment house, all of the meter sockets shall be grouped adjacent to each other and must be individually numbered and identified according to apartments. In remodeling where two separate houses are combined with an addition to form one building, the meter sockets shall be moved to a joint location. In a remodeling where the meter loop is changed or moved, or any change made in writing, it will be necessary to install outdoor type meter sockets.

H. All meters installed for commercial use shall be at a point designated by the Company. An outdoor location is preferred for all meters, provided the meters will not be subject to damage due to a hazardous location. No meter shall be installed in any location where it may be unnecessarily exposed to heat, cold dampness, or other cause or in any unduly dirty or inaccessible location. There shall be an approved unbroken conduit complete with wire from the service entrance to the socket.

I. All single-phase meters installed for Commercial use that do not require current transformers shall be socket type with the socket installed at a location approved by the Company. The meter sockets shall be mounted at a height of six feet above the finished grade. The service equipment shall be installed as required by applicable codes.

J. When single-phase meter installations require current transformers, the Customer shall furnish and install a metal cabinet per Company requirements to house the transformers. The cabinet shall be provided with a suitable means for mounting the transformers per Company requirements.

K. In all installations requiring instrument transformers, whether single-phase or three-phase, the Customer shall provide the service entrance conductors. When the meter is to be placed in the instrument transformer cabinet, a suitable window shall be provided so that the meter can be read without opening the door.

L. The Customer will install a metering and/or instrument cabinet whenever, in the Company's opinion, the Customer's load exceeds the capacity of the applicable self-contained meter. Detailed specifications of metering and instrument cabinets are available upon request all the Company's office.

A metering and/or instrument cabinet shall be installed by the Customer under any of the following conditions:

1. When the single-phase main or disconnect switch is larger than 200 amperes.
2. When the three-phase main or disconnect switch is larger than 100 amperes.

M. Metering and instrument cabinets shall not be used to house Customer-owned equipment, such as distribution panels or other equipment, nor used as a junction box for the distribution of circuits.

N. All meter loops for single-phase meters that do not require current transformers shall be wired in accordance with the approved meter sequence; that is, (1) meter; (2) switch; (3) fuses.

O. All meter loops for single-phase and three-phase, with or without meter instrument transformers, shall be wired with the meter or current transformers ahead of the switch. On all self-contained three-phase base meter loops the Customer shall furnish and install "Enclosed Meter Connection Test Blocks (Six Terminal)", the metal cabinet of which shall be sealable, and placed in line and ahead of the main switch. Whenever three-phase meters are installed on the outside of the building due to Company or other requirements, the Customer shall furnish and install an approved metallic, weatherproof cabinet to house the meters and metering transformers per Company requirements.

P. All electricity sold by the Company shall be on a basis of meter measurement except for service or installations where the load is constant and the consumption may be readily computed.

Q. Upon request, the Company shall make a test of the meter serving the Customer. The Company shall advise the Customer that he may be present during the meter test. If the meter has been tested within the last eighteen (18) months, the Company may charge the Customer pursuant to Rate Schedule 20, for making such a test, such charge to be refunded to the Customer whenever the meter proves to be in excess of 2 percent in error.

1. The Customer, or his/her representative, may be present when the meter is tested, if the Customer's request to be present is made at the time of his/her request for the meter test. The Company shall give the Customer reasonable advance notification as to the day, time and place of test.
2. A report of the results of the test shall be made to the Customer within a reasonable time after the completion of the test, and a record of the report, together with a complete record of each test, shall be kept on file at the office of the Company.

Trenching Policy

General

(Applies to all Service, Secondary, and Primary conduits)

- The customer will provide, install, and cover all conduits at their expense
- The customer will provide a pull string in place that will be capable of pulling in a 1/4" rope (Mandatory in all conduits).
- Buried conduit will be gray (electrical), schedule 40. Above ground conduit will be schedule 80.
- Jointed conduit will be properly cemented, and the bottom of the ditch should evenly support the conduit.
- Backfill within 6" of conduit should not have rock larger than 3" in maximum dimension.
- A PNM representative will inspect the conduit installation (with the installer present) at 2 stages of the work, first when the conduit is in the ditch, ready to be covered—to verify the depth, the dirt evenly supporting the conduit, and layout of elbows. The second will be after 12" of cover has been added, to verify the quality of fill, and layout of conduit turned up, and to provide the warning tape, which is to be, installed 12" below final dirt grade. Schedule with your new service representative for inspections. If additional inspections are required due to sub-standard installation, their cost will be due before PNM proceeds to install the wire.
- A PNM representative must be present when conduit is installed in an existing PNM Transformer, or cabinet. (Schedule in advance with your new service representative)
- Conduit will be terminated with a bell end at pad transformers, junctions, and secondary pedestals (to prevent wire damage) with the top of the bell about 6 inches above final dirt grade. Leave bell end at the site for PNM workers to install.
- At a pole, the conduit should be turned up about 6" above final dirt grade, with 6" between the conduit and the pole (PNM will extend the conduit up the pole on standoffs). Multiple conduits space 6" apart at pole.
- Phone and CATV utilities may be in the same ditch, with at least 12" separation from PNM conduit.
- After PNM installs wire in the conduit, the conduit will be owned & maintained by PNM.
- No permanent structure should ever be constructed over PNM conduit.

Secondary & Service Conduit (120/240 volt)

- Conduits for this use will be at least 3" inside diameter.
- The conduit should be in a ditch dug 36" deep, the absolute minimum is to have 24" inches from top of the conduit to final grade. If capped (top & sides) with 4" of 2500 PSI. concrete cover can be 12".
- A single run of conduit can be up to 200' if the ditch is straight, or up to 120' with one 90° elbow.
- If the permanent meter is not on a building constructed on the site, the metering facility should usually be of the pedestal type, set in concrete (18" x 18" x 8" Minimum--flush with finish grade) – See PNM approved meter socket list.
- Conduit bends going from horizontal to vertical should not be less than 24" radius.

- Conduit bends to change direction of the ditch should not be less than 36” radius. (check with new service representative for number of bends and length of runs allowed).

Primary Conduit (7200 or 14,400 volt -- with light loading)

- Conduit may be 2” (jointed or continuous) inside diameter. Three-phase will require three 2” conduits.
- This conduit should be in a ditch dug 48” deep; the absolute minimum is to have 36” inches from top of the conduit to final grade. If capped (top & sides) with 4” of 2500 PSI. concrete cover can be 24”.
- All Conduit bends for primary must be at least 36” radius.
- A single run of conduit can be up to 800 ft if the ditch is straight, or up to 500’ with one 90° elbow. Curving ditches will need to be evaluated by the Designer to determine allowable lengths.
- The site for a Transformer or Switch Cabinet shall have the ditch tamped, to prevent settling. A switch cabinet base is set 9” below final grade (by the conduit installer – 30”x 72” base). Clear space from a XFMR pad is 1’ back and sides and 10’ front; and from a cabinet 10’ in front, and 3’ on other sides.
- The site for a transformer or switch cabinet plus surrounding 2’ area shall be level and tamped. Should the pad location or underground conduits be in an area susceptible to erosion stabilization of surrounding ground to be done to PNM approval and will be completed before installation of PNM Electrical Equipment.
- Check with your new service representative about anything not covered here, or for special needs.

Customer-Owned Generating Systems: Interconnection and REC Purchase Programs

This chapter focuses on the requirements for contractors and electricians involved in the design and installation of customer-owned generating systems up to 1 MW in size that will interconnect with PNM's electric grid. These include solar photovoltaic and solar thermal electric systems. We want to work with you and assist you so that these installations and interconnections work smoothly.

The requirements in this chapter are necessary for the continuing safety of our customers, contractors, electricians and PNM personnel. We provide this document to:

- Ensure compliance with the requirements of the New Mexico Public Regulation Commission
- Coordinate with the requirements of local government inspection and permitting agencies regarding enforcement of the National Electric Code (NEC), and the National Electric Safety Code (NESC).

Our process to provide you with electricity is governed by several policies that are approved and monitored by the New Mexico Public Regulation Commission. The complete text of these policies can be obtained from your new service representative. Most of these policies are included in summary form in the chapter of this document on "Policies", page 61. In this chapter, we provide you with the important information from these policies that affects the solar contractor and electrician.

All questions should be directed to 505-241-2519 or 505-241-2589.

One Line Diagram Example Grid-Tied System

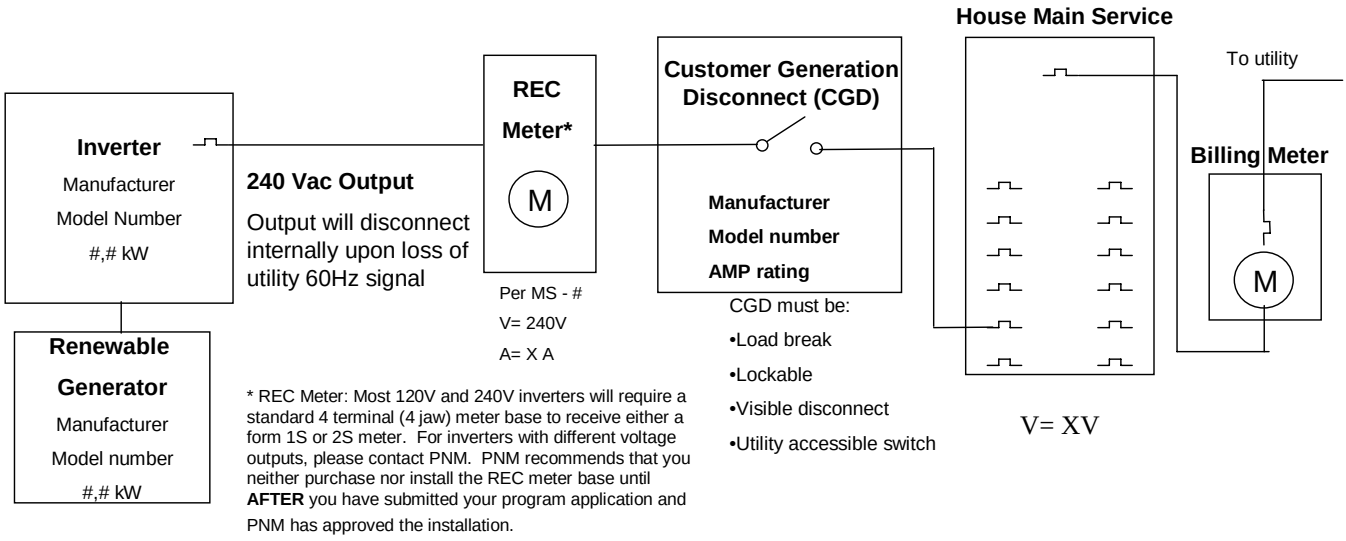

Please include the following:

- ❑ Renewable generator (PV panels or solar thermal electric generator) manufacture, model number and total kW
- ❑ Inverter (must include manufacturer, model number, VAC rating and total combined nominal amps)
- ❑ Customer generation AC disconnect (must include manufacturer, model number and VAC rating and proper labeling ”load break, lockable, visible disconnect, utility accessible”
- ❑ REC meter (must include meter standard number and include metering voltage)
- ❑ Main service panel
- ❑ Billing meter
- ❑ Other (e.g. batteries, transfer switches, DC disconnect, etc.)

One Line Diagram Example Line Side Tap

The purpose of this sample one-line diagram is show a utility line side tap. This occurs when the PV system is not wired into a back fed breaker within the house main service panel.

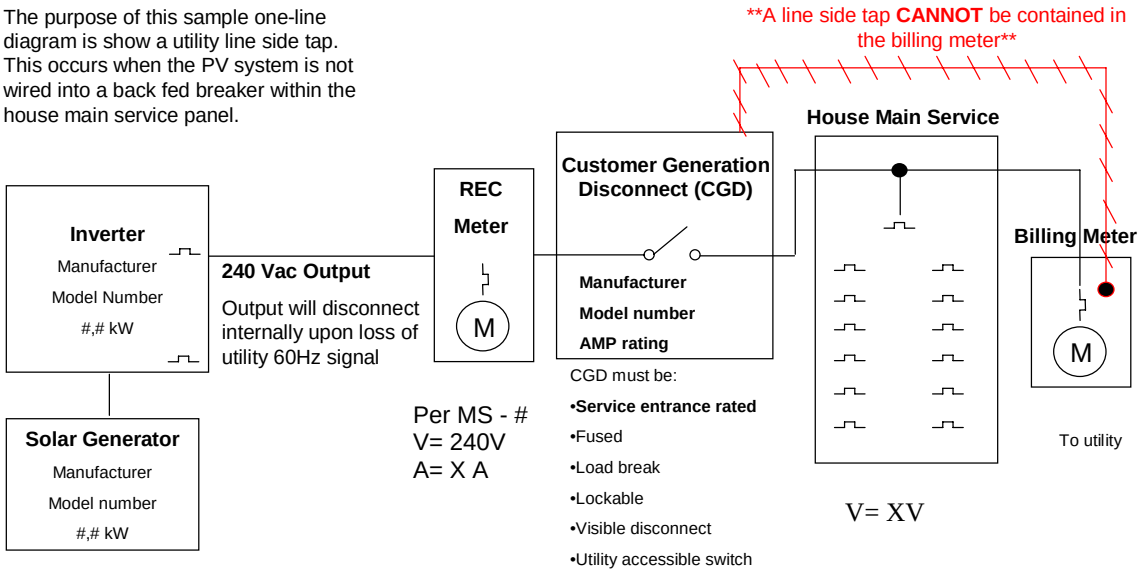

Please include the following:

- ❑ Renewable generator (PV panels or solar thermal electric generator) manufacture, model number and total kW
- ❑ Inverter (must include manufacturer, model number, VAC rating and total combined nominal amps)
- ❑ Customer generation AC disconnect (must include manufacturer, model number and VAC rating and proper labeling ”service entrance rated, load break, lockable, visible disconnect, utility accessible”
- ❑ REC meter (must include meter standard number and include metering voltage)
- ❑ Main service panel
- ❑ Billing meter
- ❑ Other (e.g. batteries, transfer switches, DC disconnect, etc.)

One Line Diagram Example Battery Backup

The purpose of this sample one-line diagram is to show a PV system with battery backup. Please note, a battery backup system will reduce REC production.

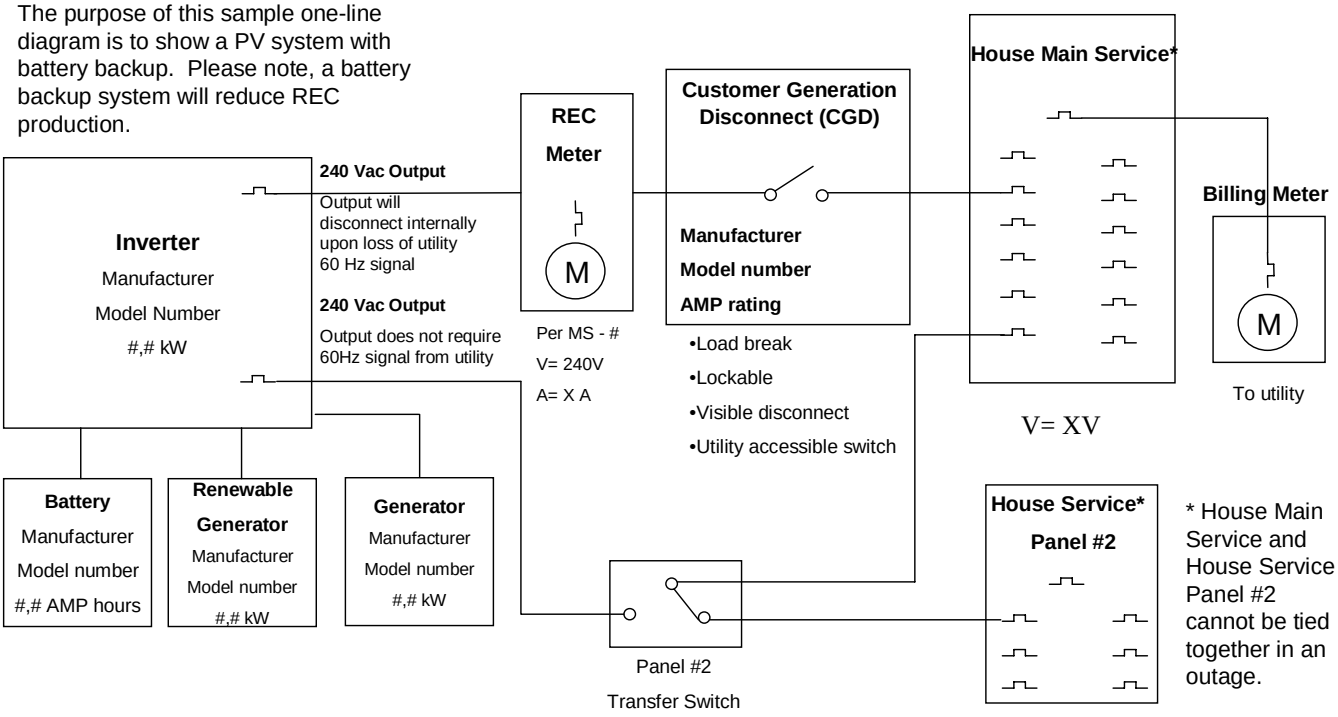

Please include the following:

- ❑ Renewable generator (PV panels or solar thermal electric generator) manufacture, model number and total kW
- ❑ Inverter (must include manufacturer, model number, VAC rating and total combined nominal amps)
- ❑ Customer generation AC disconnect (must include manufacturer, model number and VAC rating and proper labeling ”load break, lockable, visible disconnect, utility accessible”
- ❑ REC meter (must include meter standard number and include metering voltage)
- ❑ Main service panel
- ❑ Billing meter
- ❑ Other (e.g. batteries, transfer switches, DC disconnect, etc.)

Three-Line Diagram Example Grid-Tied System

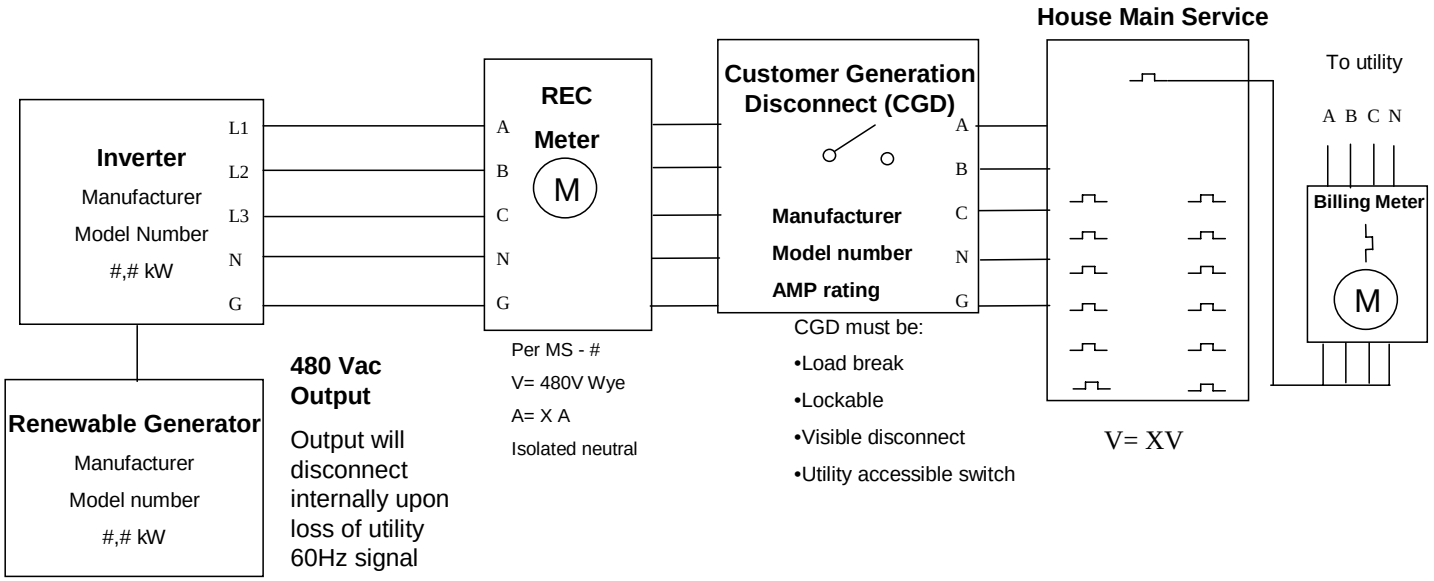

Please include the following:

- ❑ Renewable generator (PV panels or solar thermal electric generator) manufacture, model number and total kW
- ❑ Inverter (must include manufacturer, model number, VAC rating and total combined nominal amps)
- ❑ Max Inverter Fault Contribution
- ❑ *Please describe the operational characteristics of the inverter(s) when subjected to a utility fault. This should include the three-phase, and phase-ground fault current contributions, and nominal voltage level, from the inverter(s), both in magnitude and duration over a period of up to 2 seconds.*
- ❑ Transformer configurations and voltages
- ❑ (if customer owned equipment) transformer sizes and impedance values.
- ❑ (if customer owned equipment) protection equipment: size, type, manufacture.
- ❑ (if customer owned equipment) all equipment downstream of the common point of coupling must be included on drawings: i.e. transformers, switchgears, primary meters.
- ❑ Drawings must include all PNM equipment designated names and/or numbers. Drawings must reflect what is physically on site, apparatus numbers must be included (i.e. switchgears, transformers, meters, etc...)
- ❑ Drawings must be clear and concise and include all apparatus to PNM service. Must clearly include all conductors (include sizes) and terminating points to the common point of coupling
- ❑ Drawings must reference service entrance rated disconnect (if applicable)
- ❑ Customer generation AC disconnect (must include manufacturer, model number and VAC rating and proper labeling ”load break, lockable, visible disconnect, utility accessible”
- ❑ REC meter (must include meter standard number and include metering voltage) state isolated neutral (if applicable)
- ❑ Stamped drawings if greater than 50kW
- ❑ IDR meter is required if greater than or equal to 250kW
- ❑ If required CT or Primary Metering, customer is required to work with NSD for installation and payment
- ❑ Combined inverter(s) nominal output at REC meter. Include proper metering voltage. AIC rating of customer’s service equipment.
- ❑ Combined inverter(s) nominal output at REC meter. Include proper metering voltage.

SITE MAP
(Figure 1)

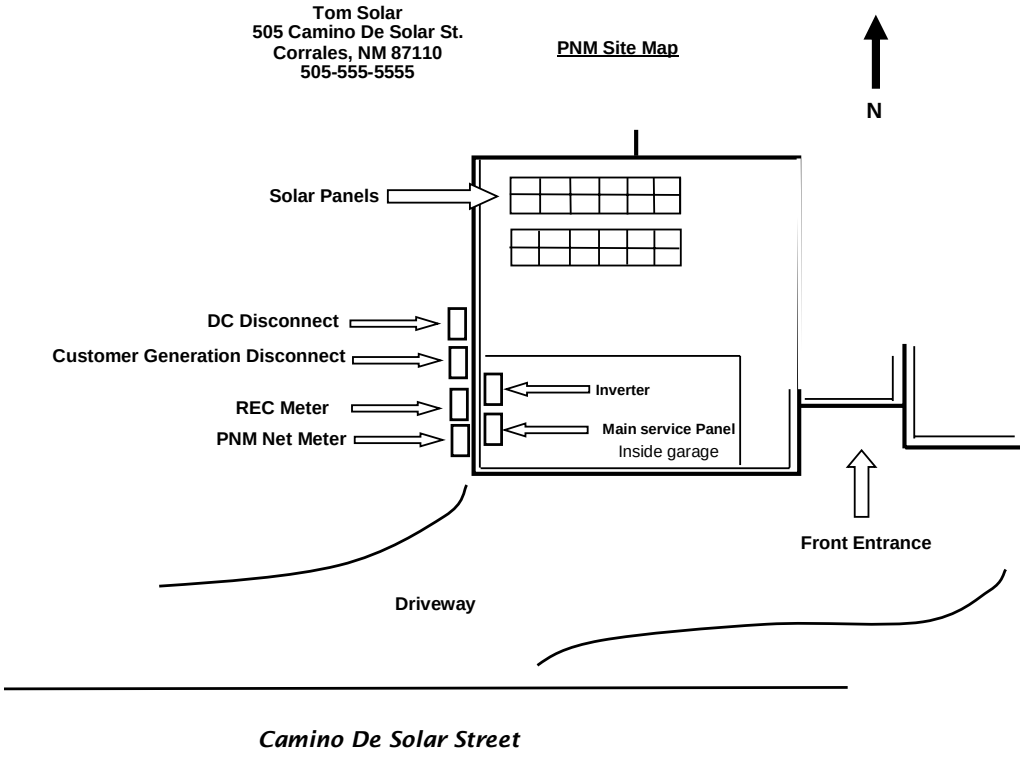

Please include the following:

- ❑ Location of renewable generator (PV panels or solar thermal electric generator) manufacture, model number and total kW
- ❑ Location of the inverter(s) (must include manufacturer, model number and kW rating)
- ❑ Location of the customer generation AC disconnect
- ❑ Location of the REC meter
- ❑ Location of main service panel
- ❑ Location of billing meter
- ❑ Direction indication
- ❑ Street name
- ❑ Customer name and address
- ❑ Other (e.g. batteries, transfer switches, DC disconnect, etc.)

One-Line, Site Map and Placard Requirements
(Figure 2)

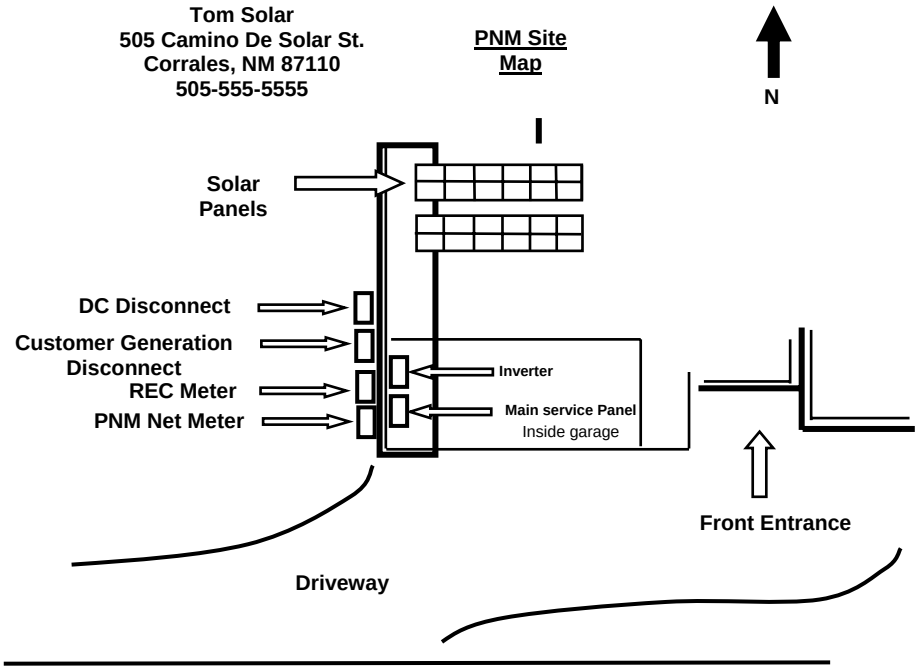

REC meter & Net Meter are grouped together and in plain line of sight. 1-line diagram is placed at PNM Net Meter

The placard: "Utility Safety Disconnect use to Isolate from Customer Generation" is placed on the Customer Generation Disconnect

One-Line, Site Map and Placard Requirements
(Figure 3)

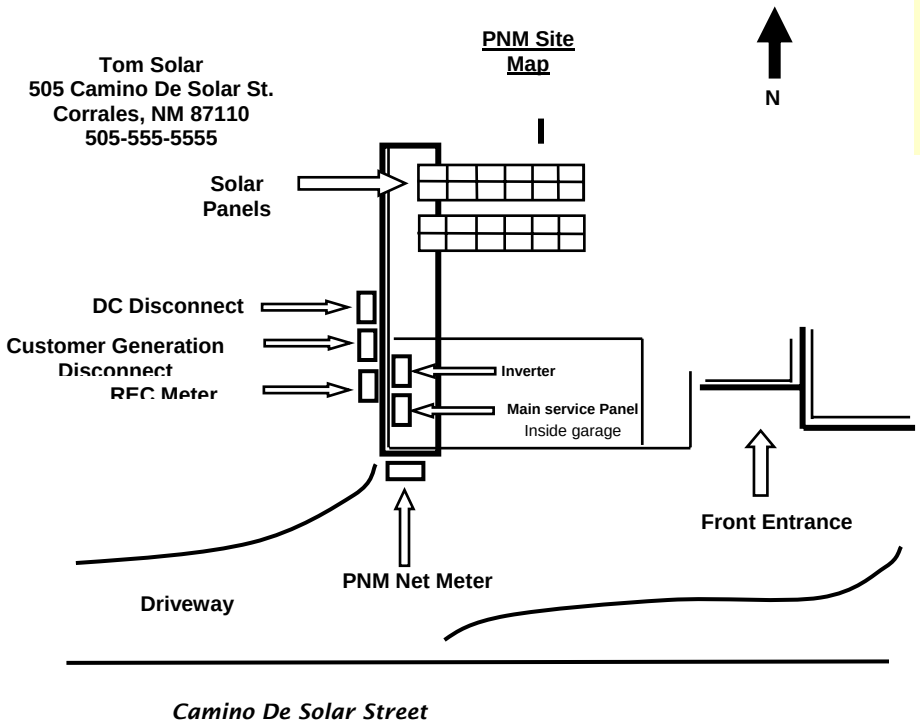

REC meter & Net Meter are not grouped together and not in plain line of sight
Site Map is placed at the PNM Net Meter.
1-line diagram is placed at the REC Meter.

The Placard: "Warning Customer-owned Generator Connected. See drawing for Disconnect Location" is placed at the PNM Net Meter

The placard: "Utility Safety Disconnect use to Isolate from Customer Generation" is placed on the Customer Generation Disconnect

One-Line, Site Map and Placard Requirements
(Figure 4)

Tom Solar
505 Camino De Solar St.
Corrales, NM 87110
505-555-5555

PNM Site Map

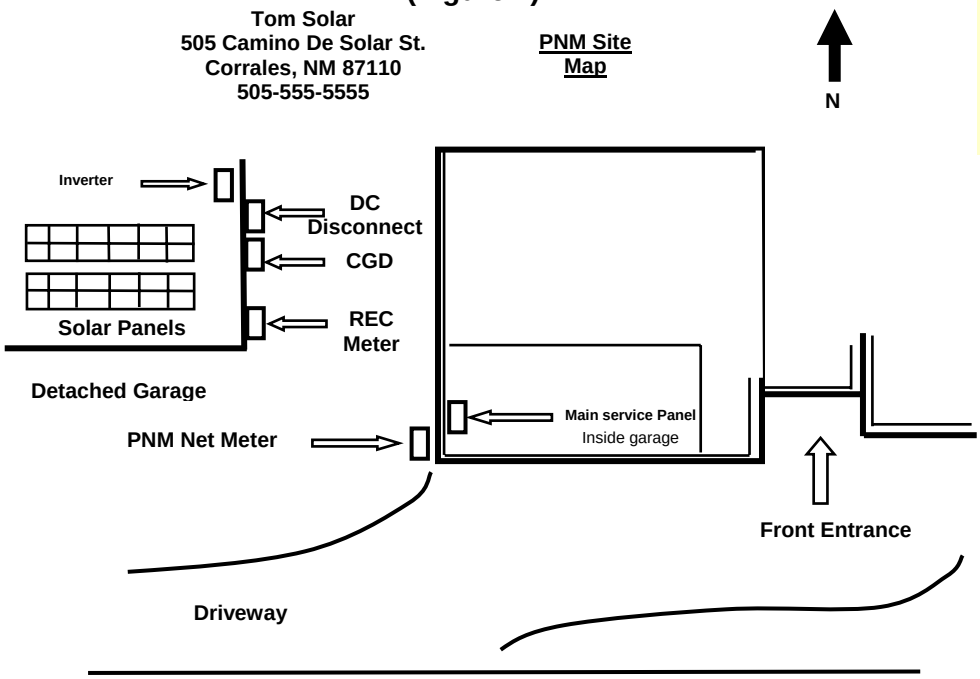

REC meter & Net Meter are not grouped together and not in plain line of sight
Site Map is placed at the PNM Net Meter.
1-line diagram is placed at the REC Meter.

The Placard: "Warning Customer-owned Generator Connected. See drawing for Disconnect Location" is placed at the PNM Net Meter

The placard: "Utility Safety Disconnect use to Isolate from Customer Generation" is placed on Customer Generation Disconnect

One-Line, Site Map and Placard Requirements
(Figure 5)

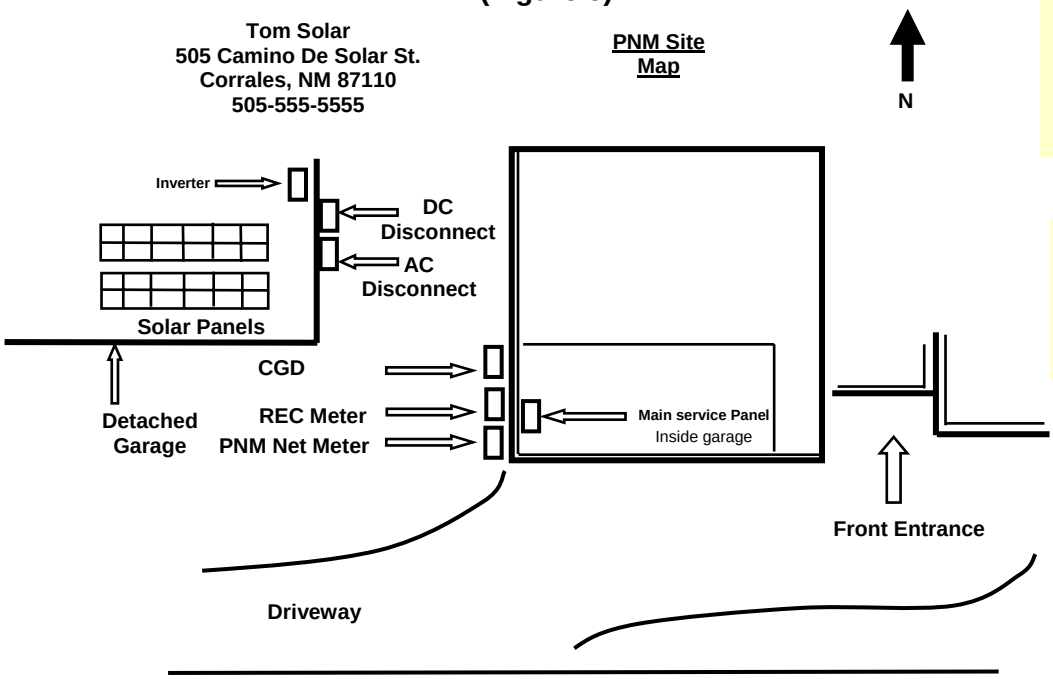

REC meter & Net Meter are grouped together and in plain line of sight 1-line diagram is placed at the REC Meter.

The placard: "Utility Safety Disconnect use to Isolate from Customer Generation" is placed on Customer Generation Disconnect

IMPORTANT NOTICE!

The drawings in the following section are current as of January 1, 2013. Please note that changes may be made to any drawing at different times throughout the year. Check PNM's web site www.pnm.com/esg for the latest edition of any given drawing or contact your new service representative.

Blank Page for Notes